WARWICK®

useful fixture for effective clamping

SIMPLE · AFFORDABLE · STABLE

VISES - FIXTURES - QUICK CHANGE SYSTEMS

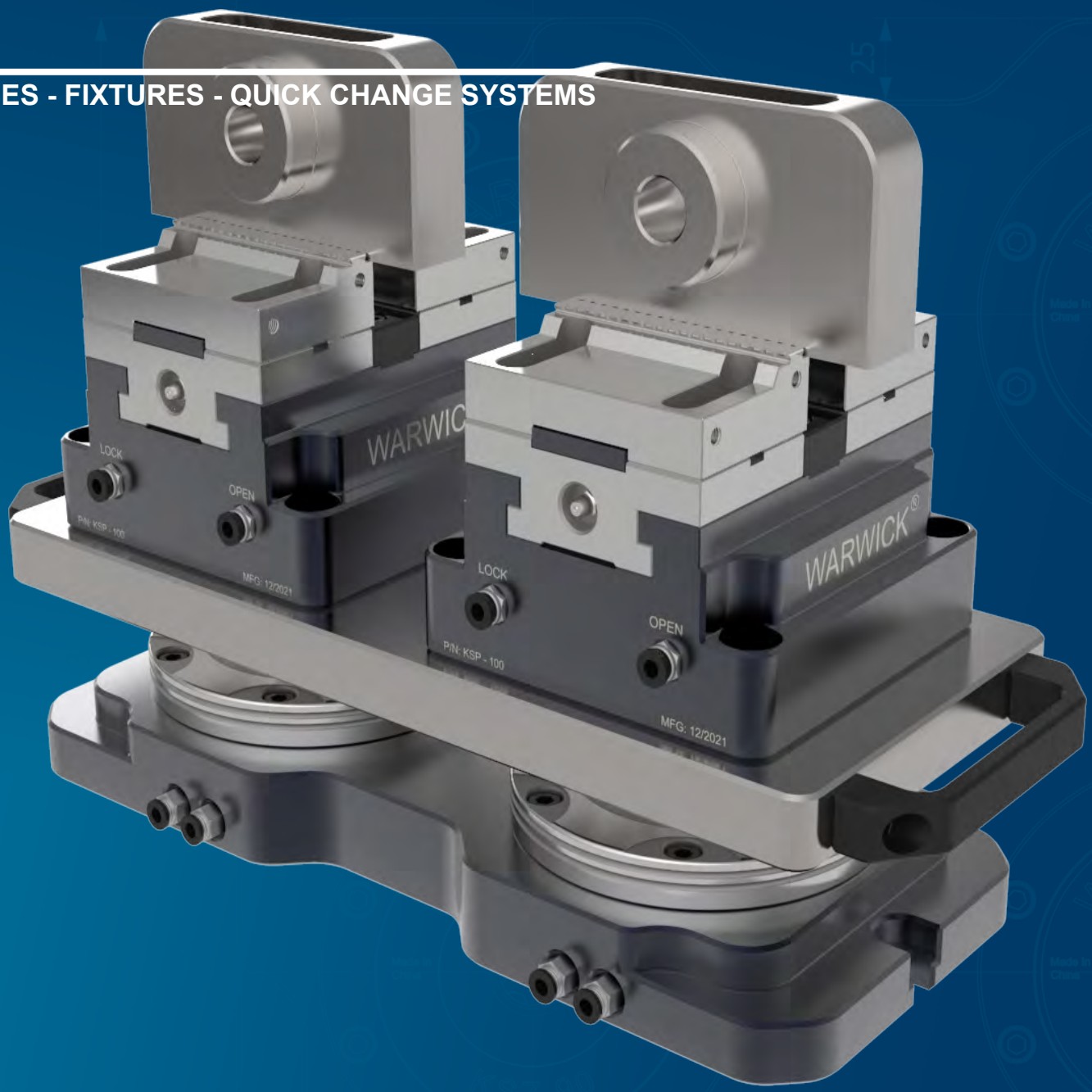

VISES - FIXTURES - QUICK CHANGE SYSTEMS

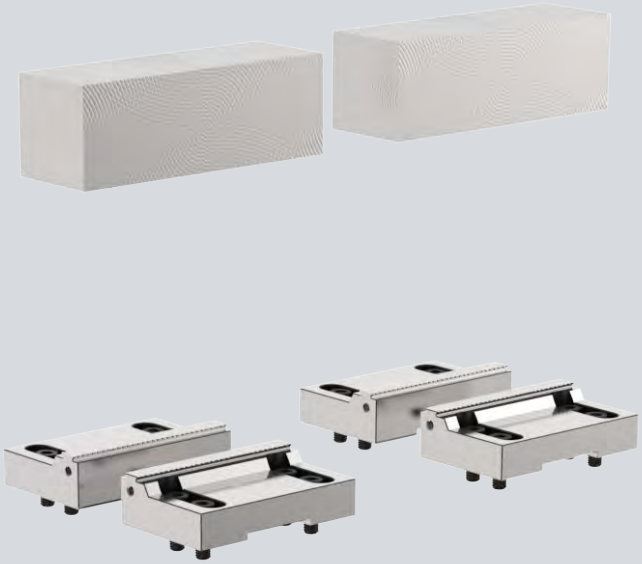

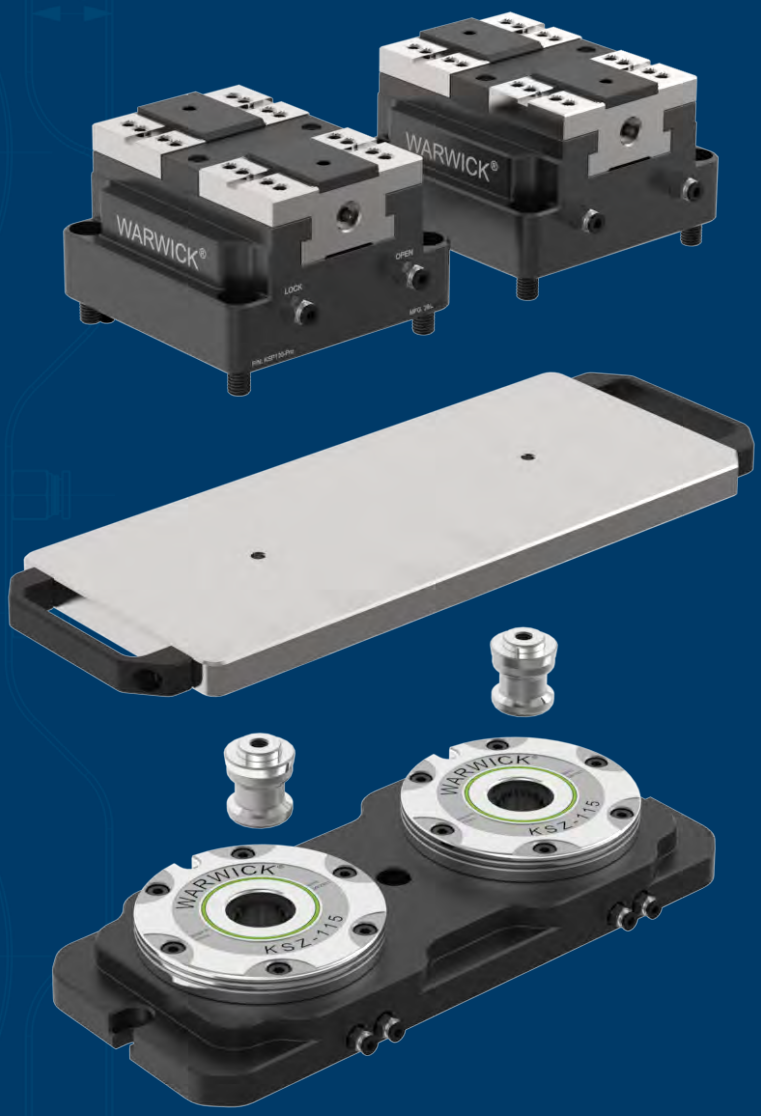

WARWICK®

Distributore per l'Italia:
ERRECI srl
www.erreci.srl
tel +39 0295339750
info@errecimp.it

Used on 3/4/5-axis machining centers

The standardized, modular system offers maximum flexibility for 3/4/5-axis machining centers. For small batches and high-precision product variances, changeovers can be made quickly and efficiently in a matter of minutes with the KSZ zero positioning system.
Another advantage: Even large quantities of workpieces can be clamped economically in the machining area using standard solutions.

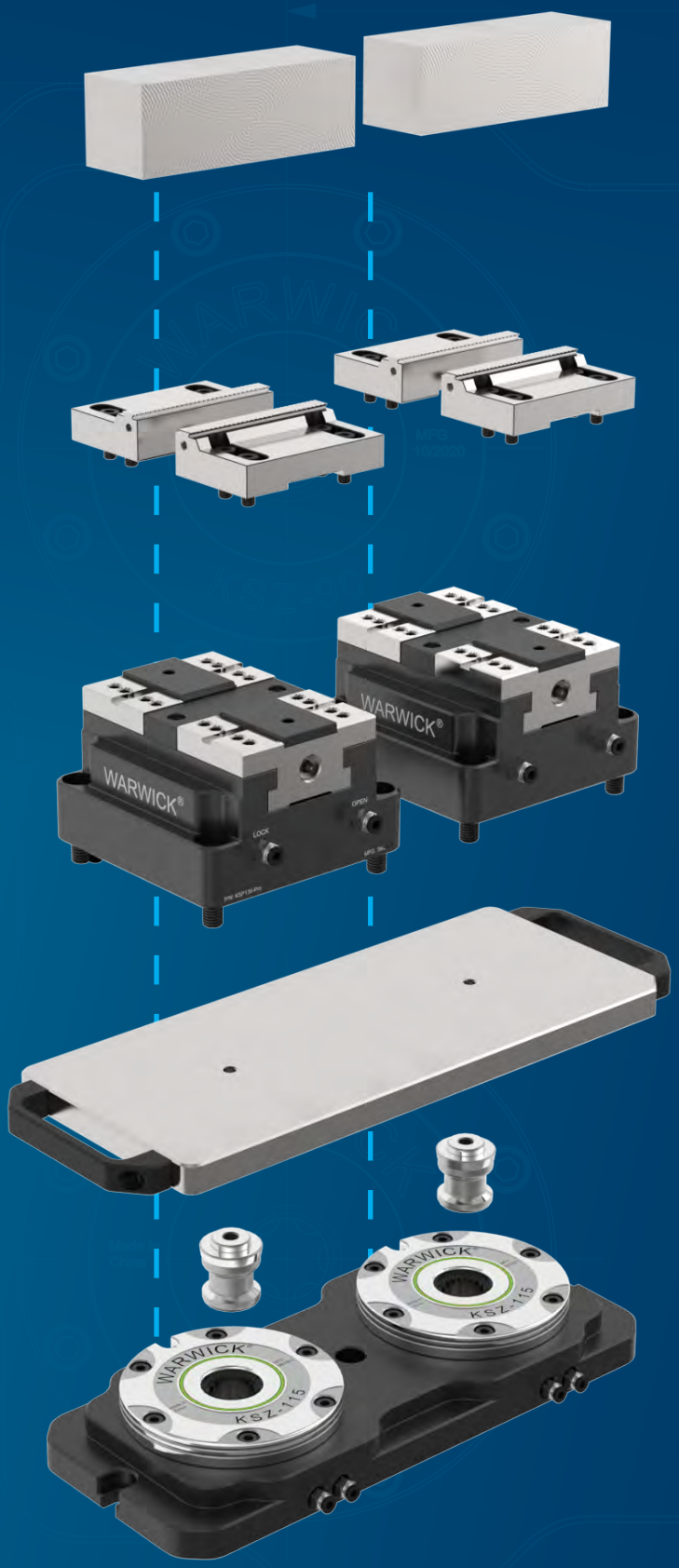

Clamping jaws

Clamping devices

Clamping pallet

Clamping pins

Clamping station

WARWICK

Selection Guide

Used on 3-axis machining centers

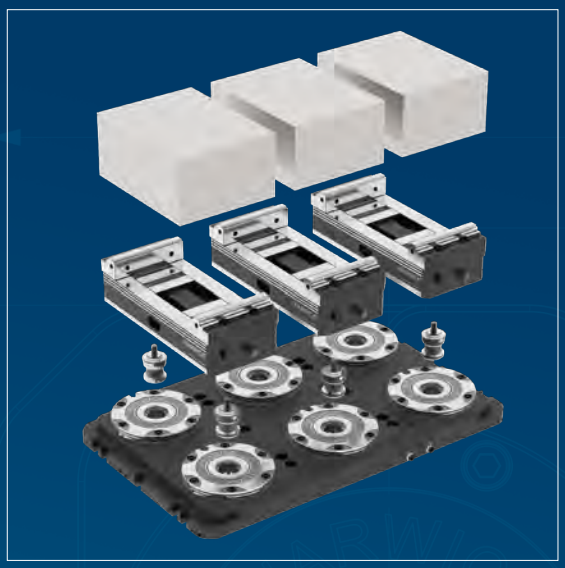

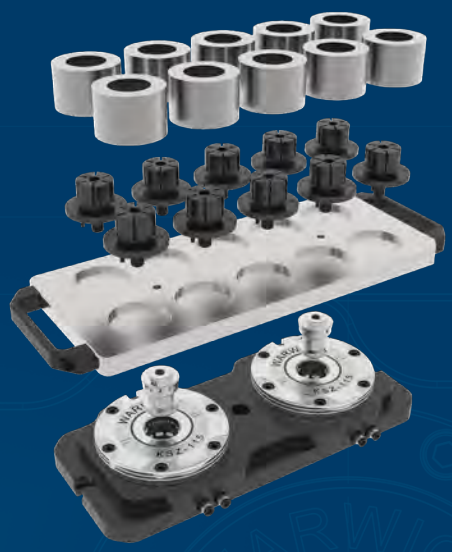

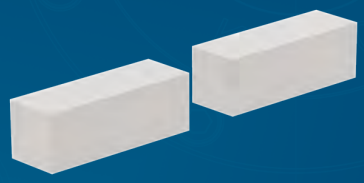

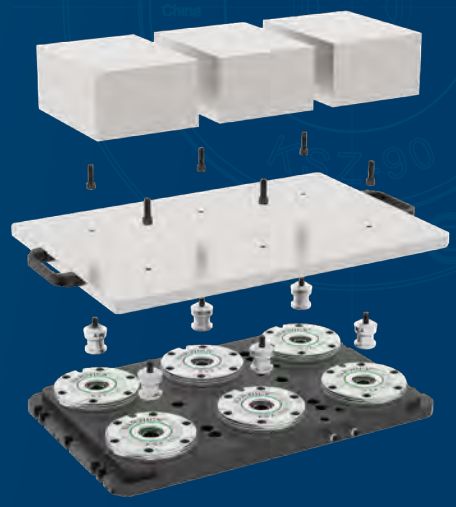

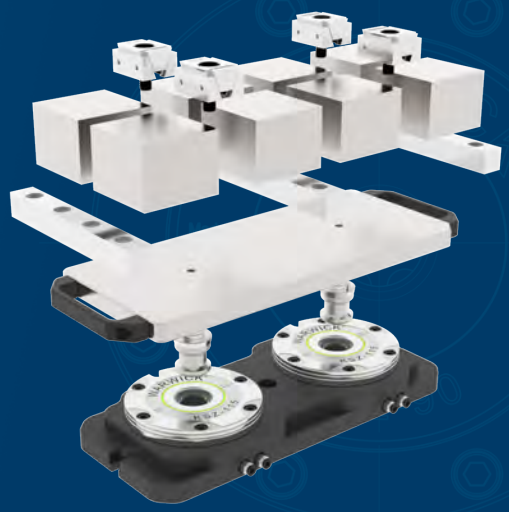

WARWICK

Selection Guide

Used on 4-axis or 5-axis machining centers

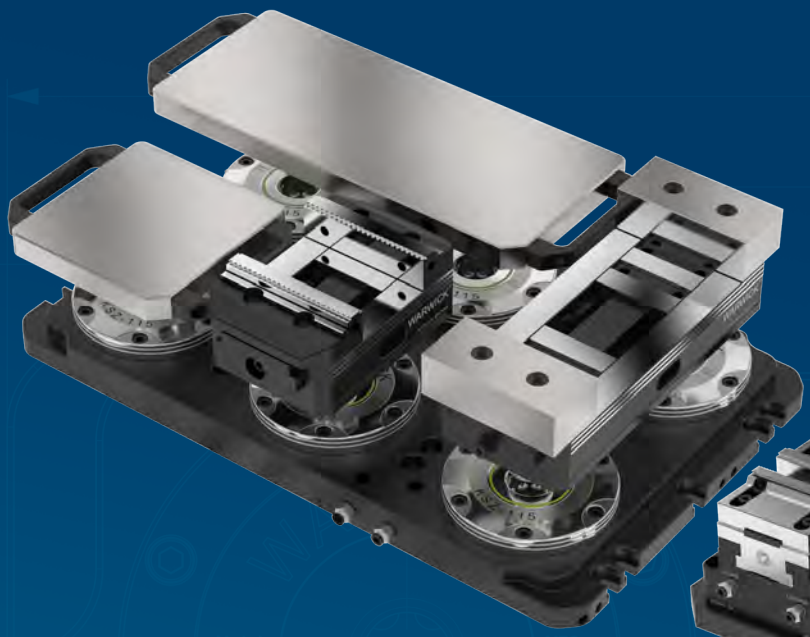

Applied to CNC

Modular clamping system

Combined with a modular clamping system that can be used separately, it improves clamping accuracy and clamping efficiency.
. More than 500 workholding combinations
. Up to 90% reduction in clamping time

Pneumatic self-centering vise

B1-B12

Manual self-centering vise

C1-C30

Zero point positioning system

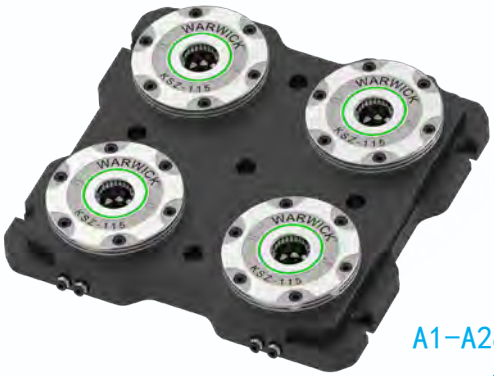

A1-A28

Parallel multi-station vise

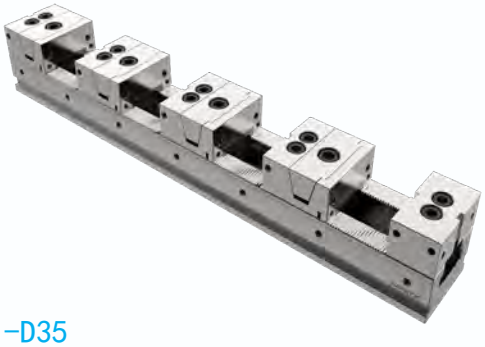

D1-D35

compact fixture

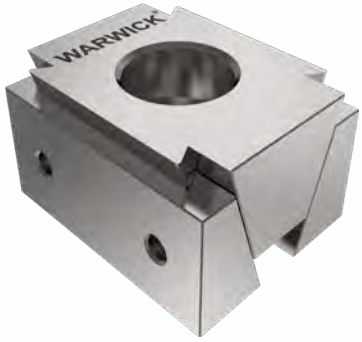

E1-E4

	KSZ Zero point positioning system KSZ-88					
				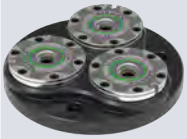		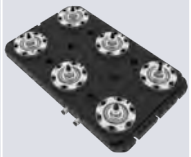
Model	KSZ-88	KSZ88-T1	KSZ88-T2	KSZ88-R3	KSZ88-T3	KSZ88-T6
Drive mode						
Drive mode	●	●	●	●	●	●
Manua l						
Product description						
Form factor	Φ88*34	Φ118*40	283*110*40	Φ280*42	433*111*40	433*261*40
Clamping force	6.5 KN	6.5 KN	6.5 KN	6.5 KN	6.5 KN	6.5 KN
Center distance			150 mm	Φ110 mm	150 mm	150 mm
Drive pressure/torque	6.5 bar	6.5 bar	6.5 bar	6.5 bar	6.5 bar	6.5 bar
Common features	. positioning , fixting and clamping in one operation - change workpieces and fixtures in second - the workpieces is clamped directly - stainless steel material -suitable for small machines and light cutting - AII WARWICK clamping modules can be used - DCPA-23/DCPB-23/DCPB-23 dowel pins are used - the diameter of the disk is ø88					
differential chracteristics	. A base connection is required	. No base required . Single head clamping station	. No base required . Double-ended clamping station			

Click on the image to learn more

	KSZ Zero point positioning system KSZ-90					
						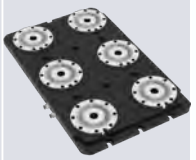
Model	KSZ-90	KSZ90-T1	KSZ90-T2	KSZ90-T3	KSZ90-T4	KSZ90-T6
Drive mode						
Drive mode	●	●	●	●	●	●
Manua l						
Product description						
Form factor	Φ130*37.5	Φ162*39	380* 158*40	580*158*40	368*368*40	580*358*40
Clamping force	14 KN	14 KN	14 KN	14 KN	14 KN	14 KN
Center distance			200 mm	200 mm	200 mm	200 mm
Drive pressure/torque	6.5 bar	6.5 bar	6.5 bar	6.5 bar	6.5 bar	6.5 bar
Common features	. positioning , fixting and clamping in one operation - change workpieces and fixtures in second - the workpieces is clamped directly - stainless steel version -suitable for conventional machines and medium cutting - AII WARWICK clamping modules can be used - DCPA-23/DCPB-23/DCPB-23 pull pegs are used - the diameter of the disk is ø130					
differential chracteristics	. A base connection is required	. No base required . Single head clamping station	. No base required . Double-head clamping station	. No base required . Three-head clamping station	. No base required . Four-head clamping station	. No base required . Six-head clamping station

WARWICK

Selection Guide

Click on the image to learn more

	DCP-23 DCP-23 Zero point positioning system DCP-23		
Model	DCPA-23	DCPB-23	DCPC-23
Drive mode			
Drive mode			
Manual	●	●	●
Product description			
Form factor	Φ23*34	Φ23*34	Φ23*34
Clamping force	Suitable for zero positioning KSZ-88/KSZ90		
Drive pressure/torque	25 N.m	25 N.m	25 N.m
Common features	. positioning , fixting and clamping in one operation - change workpieces and fixtures in second - the workpieces is clamped directly - stainless steel version -suitable for conventional machines and medium cutting - All WARWICK clamping modules can be used		
differential chracteristics	. Positioning clamp pin-determine the positioning origin and lock it .Suitable for single head workstation and above .Can use 1pcs only in a setup. .Can use alone	. Directional clamp pin-Assist in positioning and lock it . Suitable for double-head workstation and above . Can use 1pcs only in a setup . Needs to be used in combination with DCPA	. Locking Clamp pin-Just locking function . Suitable for three-head workstation and above . No limited to the number of uses in a setup . Needs to be used in combination with DCPA and DCPB

Click on the image to learn more

	Zero point positioning system KSZ-115					
				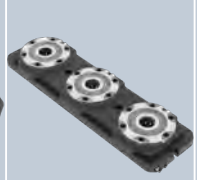	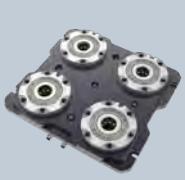	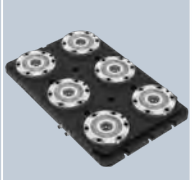
Model	KSZ-115	KSZ115-T1	KSZ115-T2	KSZ115-T3	KSZ115-T4	KSZ115-T6
Drive mode						
Drive mode	●	●	●	●	●	●
Manua l						
Product description						
Form factor	Φ142*46	Φ189*55	400*168*55	600*168*55	400*368*55	600*368*55
Clamping force	20 KN	20 KN	20 KN	20 KN	20 KN	20 KN
Center distance			200 mm	200 mm	200 mm	200 mm
Drive pressure/torque	6.5 bar	6.5 bar	6.5 bar	6.5 bar	6.5 bar	6.5 bar
Common features	. positioning , fixting and clamping in one operation - change workpieces and fixtures in second - the workpieces is clamped directly - stainless steel version - suitable for conventional machines and medium cutting - AII WARWICK clamping modules can be used - DCPA-40/DCPB-40/DCPB-40 pull pegs are used - the diameter of the disk is ø143					
differential chracteristics	. A base connection is required	. No base required . Single head clamping station	. No bas required . Double-head clamping station	. No base required . Three-head clamping station	. No base required . Four-head clamping station	. No base required . Six-head clamping station

Click on the image to learn more

	DCP-40 Zero point positioning system DCP-40		
Model	DCPA-40	DCPB-40	DCPC-40
Drive mode			
Drive mode			
Manual	●	●	●
Product description			
Form factor	Φ40*45	Φ45*45	Φ40*45
Clamping force	Suitable for zero point clamps KSZ-115		
Drive pressure/ torque	60 N.m	60 N.m	60 N.m
Common features	. positioning , fixting and clamping in one operation - change workpieces and fixtures in second - the workpieces is clamped directly - stainless steel version - suitable for heavy cutting regardless of machines - All WARWICK clamping modules can be used		
differential chracteristics	. Positioning clamp pin-determine the positioning origin and lock it .Suitable for single head workstation and above .Can use 1pcs only in a setup. .Can use alone	. Directional clamp pin-Assist in positioning and lock it . Suitable for double-head workstation and above . Can use 1pcs only in a setup . Needs to be used in combination with DCPA	. Locking Clamp pin-Just locking function . Suitable for three-head workstation and above . No limited to the number of uses in a setup . Needs to be used in combination with DCPA and DCPB

Click on the image to learn more

	TPC Quick change of pallets TPC-23/TPC-40					
	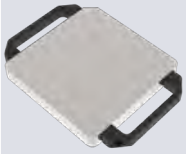					
Suitable for zero-point positioning models						
KSZ-88	TPC23-88-T1	TPC23-88-T2	TPC23-88-T3	TPC23-88-T4	TPC23-88-T6	
KSZ-90	TPC23-90-T1	TPC23-90-T2	TPC23-90-T3	TPC23-90-T4	TPC23-90-T6	
KSZ-115	TPC40-115-T1	TPC40-115-T2	TPC40-115-T3	TPC40-115-T4	TPC40-115-T6	
Product description						
Material	Steel/aluminum	Steel/aluminum	Steel/aluminum	Steel/aluminum	Steel/aluminum	
Height	20/25 mm	20/25 mm	20/25 mm	20/25 mm	20/25 mm	
Center distance	150 / 200 mm	150 / 200 mm	150 / 200 mm	150 / 200 mm	150 / 200 mm	
Drive pressure/torque	6.5 bar	6.5 bar	6.5 bar	6.5 bar	6.5 bar	
Common features	. Available in both steel and aluminum . The tray contains positioning/directional tensioning pins . Customizable pallets . With grip for handling					
differential chracteristics	. Use 1pcs positioning clamp pin DCPA and 1pcs dowel pin	. Use 1pcs positioning pin DCPA and 1pcs directional pin DCPB	. Use 1pcs positioning pin DCPA,1pcs directional pin DCPB and 1pcs clamping pin DCPC	. Use 1pcs positioning pin DCPA /1pcs directional pin DCPB and 2pcs clamping pin DCPC	. Use 1pcs positioning pin DCPA ,1pcs directional pin DCPB, and 2pcs clamping DCPC	

WARWICK

Selection Guide

Click on the image to learn more

	Positioning chucks KSG-52/96			
Model	KSG-52S	KSG-52R	KSG-96S	KSG-Pro
Drive mode				
Drive mode				
Manua l	●	●	●	●
Product description				
Form factor	106*106*28	Φ156*28	180*180*28	167*167*28
Clamping force	15 KN	15 KN	15 KN	15 KN
Center distance	52 mm	52 mm	96 mm	52 mm +96 mm
Drive pressure/torque	30 N.m	30 N.m	30 N.m	30 N.m
Common features			. Compact design with little workspace footprint . Standard mounting interface . Milling use, high clamping force . Maintains the clamping force during the cutting process	
differential characteristics	Use a 52-type rivet		Use a 96-type rivet	Use a 96-type rivet

Click on the image to learn more

	Dowel pins 52S-16 / 96S-20			
Model				
Drive mode				
Drive mode				
Manua l	●	●		
Product description				
Form factor	Φ16*37	Φ20*39		
Lock the thread	M8	M10		
Scope of application	KSG52	KSG96		
Drive pressure/torque	25 N.m	60 N.m		
Common features				

WARWICK

Selection Guide

Click on the image to learn more

	Pneumatic self-centering vise KSP-75/100/150			
			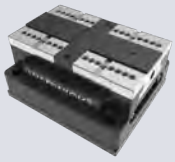	
Model	KSP-75	KSP-100	KSP-150	
Drive mode				
Drive mode	●	●	●	
Manual				
Product description				
Form factor	125*125*84.5	150*150*97.5	215*250*127.5	
Clamping force	9 KN	15 KN	22 KN	
Clamping width/stroke	75 / 5 mm	100 / 5 mm	150 / 10 mm	
Drive pressure/torque	6.5 bar	6.5 bar	6.5 bar	
Common features	. Compact design with small footprint of workingspace . compressed air can be connected to the botton or side . 2 standard jaws mounting interfaces . milling use , high clamping force . Maintains the clamping force during the cutting . profiled grippers can be insatlled according to the product . built-in spring drive, cutting off air haas a certian clamping force . integrades oil injactors on both sides, of the jaw interface to lubrificate the fuctional surface			
differential characteristics	. Use RZ-75/TRZ-75/ YZ-75/YZL-75 jaws . The maximum clamping size is 125*125mm	. Use RZ-100/TRZ-100/ YZ-100/YZL-100 jaws . The maximum clamping size is 150*150mm	. Use RZ-150/TRZ-150/ YZ-150/YZL-150 jaws . The maximum clamping size is 200*250mm	

Click on the image to learn more

	Pneumatic self-centering vise KSP2-75/100/150			
			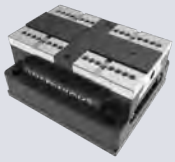	
Model	KSP2-75	KSP2-100	KSP2-125	KSP2-150
Drive mode				
Drive mode	●	●	●	
Manual				
Product description				
Form factor	125*125*84.5	150*150*97.5	200*200*127.5	
Clamping force	13 KN	18 KN	27 KN	30 KN
Clamping width/stroke	75 / 4 mm	100 / 5 mm	125/ 8 mm	150 / 8 mm
Drive pressure/torque	6.5 bar	6.5 bar	6.5 bar	6.5 bar
Common features	. Compact design with small footprint of workingspace . compressed air can be connected to the botton or side . 2 standard jaws mounting interfaces . milling use , high clamping force . Maintains the clamping force during the cutting . profiled grippers can be insatlled according to the product . built-in spring drive, cutting off air haas a certian clamping force . integrades oil injactors on both sides, of the jaw interface to lubrificate the fuctional surface			
differential characteristics	. Use RZ-75/TRZ-75/ YZ-75/YZL-75 jaws . The maximum clamping size is 125*125mm	. Use RZ-100/TRZ-100/ YZ-100/YZL-100 jaws . The maximum clamping size is 150*150mm	. Use RZ-125/TRZ-125/ YZ-125/YZL-125 jaws . The maximum clamping size is 200*250mm	. Use RZ-150/TRZ-150/ YZ-150/YZL-150 jaws . The maximum clamping size is 200*250mm

	Pneumatic self-centering vise KSP2-75L/100L/150L			
			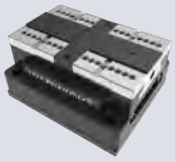	
Model	KSP2-75L	KSP2-100L	KSP2-125L	KSP2-150L
Drive mode				
Drive mode	●	●	●	●
Manua l				
Product description				
Form factor	125*125*84.5	150*150*97.5	215*250*127.5	
Clamping force	7 KN	10 KN	12 KN	16 KN
Clamping width/stroke	75 / 13 mm	100 / 16 mm	125 / 20 mm	150 / 20 mm
Drive pressure/torque	6.5 bar	6.5 bar	6.5 bar	6.5 bar
Common features	. Compact design with small footprint of workingspace . compressed air can be connected to the botton or side . 2 standard jaws mounting interfaces . milling use , high clamping force . Maintains the clamping force during the cutting . profiled grippers can be insatlled according to the product . built-in spring drive, cutting off air haas a certian clamping force . integrades oil injactors on both sides, of the jaw interface to lubrificate the fuctional surface			
differential characteristics	. Use RZ-75/TRZ-75/ YZ-75/YZL-75 jaws . The maximum clamping size is 125*125mm	. Use RZ-100/TRZ-100/ YZ-100/YZL-100 jaws . The maximum clamping size is 150*150mm	. Use RZ-150/TRZ-150/ YZ-150/YZL-150 jaws . The maximum clamping size is 200*250mm	

	KSP Jaw Jaw-75/100/150					
	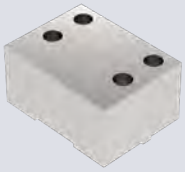	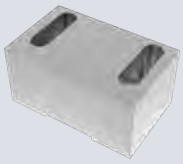	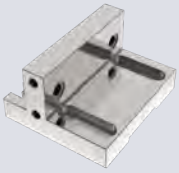			
Model	RZ	TRZ	YZL	YZ		
Drive mode						
Drive mode						
Manua l	●	●	●	●		
Product description						
Clamping force	Corresponds to interface vise					
Clamping width/stroke	75/100/150	75/100/150	75/100/150	75/100/150		
Drive pressure/torque	Corresponds to interface vise					
Common features	. Jaw material: aluminum / steel . The jaws are not hardened and can be processed . The workpiece can be clamped directly . Suitable for KSP series vises		. Jaw material: alloy steel . Hardened jaws, not machinable . The workpiece can be clamped directly . Suitable for KSP series vises			
differential characteristics	. The jaws are fixed and installed , and the jaws position is not adjustable	. The jaws have 1.5X60° teeth and can adjust the jaw position	. The jaws have 1.5X60° teeth and can adjust the jaw position . Additional jaws can be installed	. The jaws have 1.5X60° teeth and can adjust the jaw position . Low height design with toothed steps for roughing		

KSS manual self-centering vise KSS100/KSS125

		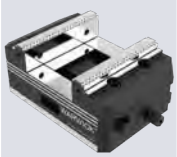					
Model	KSS100-150	KSS125-180	KSS125-300	KSF75-100	KSF75-130	KSF125-150	KSF125-250
Drive mode							
Drive mode							
Manua l	●	●	●	●	●	●	●
Product description							
Dimension	100*150*78	125*180*83	125*300*83	75*100*56	75*130*56	125*150*80	125*250*80
Jaw width	100 mm	125 mm	125 mm	75 mm	75 mm	125 mm	125 mm
Clamping force	25 KN	25 KN	25 KN	15 KN	15KN	20 KN	20 KN
Forward clamping range	0 - 80 mm	0 - 80 mm	0 - 210 mm	0 - 38 mm	0 - 68 mm	0 - 78 mm	0 - 176 mm
Reverse clamping range	60 - 140 mm	80 - 165 mm	77 - 288 mm	45 - 76 mm	46 -104 mm	75 - 126 mm	75- 220 mm
Drive pressure/ torque	100 N.m	100 N.m	100 N.m	70 N.m	70 N.m	100 N.m	100 N.m
Common features	. sealed screw design with adjustable center position -adjust the clamping range -can be used to automate pallets - it can be directly combined with the KSZ115 series quick-change system - profiled grippers can be installed according to the product - with drainage design						
differential characteristics	100mm . The jaw width is 100mm	125mm . The jaw width is 125mm	125mm . The jaw width is 125mm	75mm . The jaw width is 75mm	75mm . The jaw width is 75mm	125mm . The jaw width is 125mm	125mm . The jaw width is 125mm

	0Multi-station vise KSD-50-FD					
	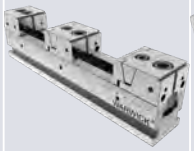	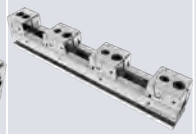	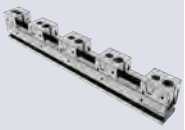			
Model	KSD50-300	KSD50-400	KSD50-500	KSD50-600	KSD50-650	KSD50-700
Drive mode						
Manual	●	●	●	●	●	●
Product description						
Clamping force	17.8 KN	17.8 KN	17.8 KN	17.8 KN	17.8 KN	17.8 KN
1 stations, max clamp size	192 mm	292 mm	392 mm	492 mm	542 mm	592 mm
2 stations, max clamp size	67 mm	117 mm	167 mm	217 mm	242 mm	267 mm
3 stations, max clamp size	25 mm	58 mm	92 mm	125 mm	142 mm	159 mm
4 stations, max clamp size	4 mm	29 mm	54 mm	79 mm	92 mm	105 mm
5 stations, max clamp size	×	12 mm	32 mm	52 mm	62 mm	72 mm
6 stations, max clamp size	×	×	17 mm	33 mm	42 mm	51 mm
7 stations, max clamp size	×	×	6 mm	20 mm	27 mm	34 mm
8 stations, max clamp size	×	×	×	10 mm	17 mm	24 mm
Drive pressure/torque	30 N.m	30 N.m	30 N.m	30 N.m	30 N.m	30 N.m
Common features				. Vice jaw width 50 mm， Height 30 mm . Customizable step toothed jaws . Single-direction clamping products . The gripper jaws of the same series can be used universally . Stations can be increased or decreased . It can be directly combined with the KSZ90 and KSZ88 series quick-change systems . The tooth surface of the guide rail is manufactured by grinding process . A variety of jaw options are available		
differential characteristics	300mm Length: 300mm	400mm Length: 400mm	500mm Length: 500mm	600mm Length: 600mm	650mm Length: 650mm	700mm Length: 700mm

	KSD50 Multi-station vise KSD-50-MD					
	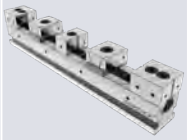	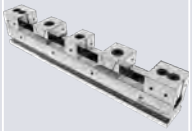			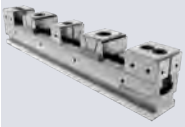	
Model	KSD50-300	KSD50-400	KSD50-500	KSD50-600	KSD50-650	KSD50-700
Drive mode						
Manua l	●	●	●	●	●	●
Product description						
Clamping force	17.8 KN	17.8 KN	17.8 KN	17.8 KN	17.8 KN	17.8 KN
1 stations, max clamp size						
2 stations, max clamp size	78 mm	128 mm	178 mm	228 mm	253 mm	278 mm
3 stations, max clamp size						
4 stations, max clamp size	20 mm	45 mm	70 mm	95 mm	108 mm	121 mm
5 stations, max clamp size						
6 stations, max clamp size	×	18 mm	35 mm	50 mm	58 mm	66 mm
7 stations, max clamp size						
8 stations, max clamp size	×	4 mm	16 mm	29 mm	35 mm	41 mm
Drive pressure/torque	60 N.m	60 N.m	60 N.m	60 N.m	60 N.m	60 N.m
Common features	. Vice jaw width 50 mm， Height 30 mm . Customizable step toothed jaws . Single-direction clamping products . The gripper jaws of the same series can be used universally . Stations can be increased or decreased . It can be directly combined with the KSZ90 and KSZ88 series quick-change systems . The tooth surface of the guide rail is manufactured by grinding process . A variety of jaw options are available					
differential characteristics	Length: 300mm	Length: 400mm	Length: 500mm	Length: 600mm	Length: 650mm	Length: 700mm

	KSD88 Multi-station vise KSD-88-FD					
			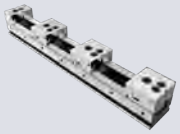			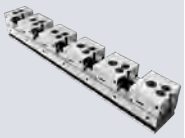
Model	KSD88-300	KSD88-400	KSD88-500	KSD88-600	KSD88-650	KSD88-700
Drive mode						
Manual	●	●	●	●	●	●
Product description						
Clamping force	35 KN	35 KN	35 KN	35 KN	35 KN	35 KN
1 stations, max clamp size	167 mm	267 mm	367 mm	467 mm	517 mm	567 mm
2 stations, max clamp size	42 mm	92 mm	142 mm	192 mm	217 mm	242 mm
3 stations, max clamp size	×	33 mm	67 mm	100 mm	117 mm	133 mm
4 stations, max clamp size	×	×	29 mm	54 mm	67 mm	79 mm
5 stations, max clamp size	×	×	×	27 mm	37 mm	47 mm
6 stations, max clamp size	×	×	×	×	17 mm	25 mm
7 stations, max clamp size	×	×	×	×	×	10 mm
8 stations, max clamp size	×	×	×	×	×	×
Drive pressure/torque	80 N.m	80 N.m	80 N.m	80 N.m	80 N.m	80 N.m
Common features differential characteristics	. Vice jaw width 88 mm， Height 40 mm . Customizable step toothed jaws . Single-direction clamping products . The gripper jaws of the same series can be used universally . Stations can be increased or decreased . It can be directly combined with the KSZ90 series quick-change systems . The tooth surface of the guide rail is manufactured by grinding process . A variety of jaw options are available					
	Length: 300mm	Length: 400mm	Length: 500mm	Length: 600mm	Length: 650mm	Length: 700mm

	KSD88 Multi-station vise KSD-88-MD					
				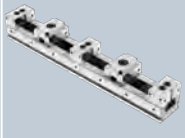		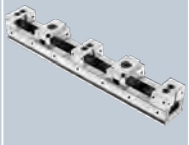
Model	KSD88-300	KSD88-400	KSD88-500	KSD88-600	KSD88-650	KSD88-700
Drive mode						
Manual						
Product description	●	●	●	●	●	●
Clamping force	35 KN	35 KN	35 KN	35 KN	35 KN	35 KN
1 stations, max clamp size						
2 stations, max clamp size	63 mm	113 mm	163 mm	213 mm	238 mm	263 mm
3 stations, max clamp size						
4 stations, max clamp size	×	26 mm	51 mm	76 mm	88 mm	101 mm
5 stations, max clamp size						
6 stations, max clamp size	×	×	14 mm	30 mm	38 mm	47 mm
7 stations, max clamp size						
8 stations, max clamp size	×	×	×	10 mm	18 mm	27 mm
Drive pressure/torque	100 N.m	100 N.m	100 N.m	100 N.m	100 N.m	100 N.m
Common features differential characteristics	. Vice jaw width 88 mm， Height 40 mm . Customizable step toothed jaws . Single-direction clamping products . The gripper jaws of the same series can be used universally . Stations can be increased or decreased . It can be directly combined with the KSZ90 and KSZ88 series quick-change systems . The tooth surface of the guide rail is manufactured by grinding process . A variety of jaw options are available					
	Length: 300mm	Length: 400mm	Length: 500mm	Length: 600mm	Length: 650mm	Length: 700mm

	KSD Multi-station vise accessories FD / FD-T / MD / MD-T / GD / GD-T					
			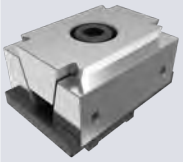	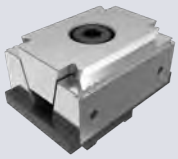	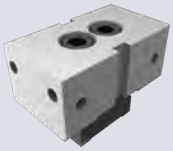	
Model	50-FD	50-FDT	50-MD	50-MDT	50-GD	50-GDT
Model	88-FD	88-FDT	88-MD	88-MDT	88-GD	88-GDT
Drive mode						
Manual	●	●	●	●	●	●
Drive pressure/torque	30/80 N.m	30/80 N.m	30/80 N.m	30/80 N.m	30/80 N.m	30/80 N.m
Common features	. Grinding process is adopted . Can be used alone or in combination with KSD rails . Hardened . Modular design, standard and uniform mounting interface					
differential characteristics	. Clamping in one direction, one workpiece at a time	. Clamping in one direction, one workpiece at a time . With toothed steps, suitable for roughing	. Clamping in two directions, two workpieces at a time	. Clamping in two directions, two workpieces at a time . With toothed steps, suitable for roughing	. Fixed datum use	. Fixed datum use . With toothed steps, it is more suitable for roughing

	KSE Mechanical Clamping System					
Model	KSE 25-6	KSE 32-8S	KSE 32-8	KSE 32-8P	KSE 50-12	KSE 50-12P
Drive mode						
Manual	●	●	●	●	●	●
Product description						
Form factor	25*29*12	32*34*15	32*40*15	32*40*15	50*39*22	50*39*22
Clamping force	11.2 KN	15.8 KN	15.8 KN	15.8 KN	28.6 KN	28.6 KN
Clamping width	25 mm	32 mm	32 mm	32 mm	50 mm	50 mm
stroke	4	4	4.5	4.5	4.5	4.5
Drive pressure/torque	18 N.m	30 N.m	30 N.m	30 N.m	76 N.m	76 N.m
Common features	. Clamp two workpieces at the same time . Toothed clamping surfaces can be customized					
differential characteristics	There are threaded holes in the clamping surface	There are no threaded holes in the clamping surface	There are threaded holes in the clamping surface	There are no threaded holes in the clamping surface	There are threaded holes in the clamping surface	There are no threaded holes in the clamping surface

KSE Mechanical Clamping System
KSH

Model	KSH12-M4	KSH14-M6	KSH20-M8	KSH27-M10	KSH35-M12	KSH51-M16	KSH77-M16
Drive mode							
Manual	●	●	●	●	●	●	
Product description							
Form factor	Φ30*21.8	Φ30*24.9	Φ38*24.9	Φ50*28.6	Φ58*31.8	Φ78*39.6	Φ108*45.5
Clamping force	3 KN	6 KN	8 KN	13 KN	15 KN	26 KN	26 KN
stroke	Φ8-12.4	Φ12.2-14.2	Φ13.5-20	Φ18-27	Φ25.4-35.3	Φ30-51	Φ30-77
Drive pressure/torque	3.5 N.m	12 N.m	24 N.m	42 N.m	105 N.m	200 N.m	200 N.m
Common features	.				. Standard installation dimensions		
differential characteristics	. The clamping range is different	. The clamping range is different	. The clamping range is different	. The clamping range is different	. The clamping range is different	. The clamping range is different	. The clamping range is different

SIMPLE-KSZ
Just to save time

SIMPLE-KSZ is the modular quick-change pallet system for very fast and extremely precise resetting of workpieces, clamping devices or other equipment on modern 3-, 4- or 5-axis machining centers. It reduces the retooling times up to 90% and thus provides optimal utilization of the machine capacity.

Quick-change Pallet Systems

Advantages – Your benefits

WARWICK modular system
Innumerable combinations of standard clamping devices
suitable for different types of machines

All modules can be operated at a system pressure of 6.5 bar Additional pressure intensifiers are not required

Positioning via short taper Very easy joining process at a repeat accuracy of < 0.005 mm

Patented drive system achieves maximum pull-down force, so very firm clamping without vibration

The module is made of anti-rust material, completely sealed, has a long service life, and the highest process reliability

Includes increased pull-down force function and self-locking function (still available when air is cut off), maximizes CNC machine performance and is therefore very efficient

Every KSZ module uses a common clamping pin size to ensure 100% compatibility without the risk of confusion or incorrect operation

Air flow is ejected from the center to protect the replacement interface from coolant, dust and debris

SIMPLE-KSZ
Technology

The clamping process is activated by an integrated spring assembly. The transmission of force is via a patented drive kinematics that converts the available spring force into a maximum pull-down force on the clamped steel ball. Automatically maintains the clamping state and integrates the function of increasing the pull-down force. Opening is performed at 6.5 bar system pressure.

SIMPLE=RELIABLE

1 Air flow is ejected from the center to protect the replacement interface from coolant, dust and debris

2 Patented structural drive system provides extremely high pull-down force between the piston and the steel ball

3 Continuous flow of compressed air increases the pulling force

4 Flat seal to protect the interface during machining Dampens the deposition of the workpiece or clamping pallet

5 Completely sealed system Therefore absolutely maintenance-free

6 Large flat surfaces for best support and highest rigidity

7 Lower-lying countersunk screws For easy cleaning

SIMPLE - KSZ - 88

Sistemi di pallet a cambio rapido/Quick-change Pallet Systems

KSZ - 88

Quick-change Pallet Module

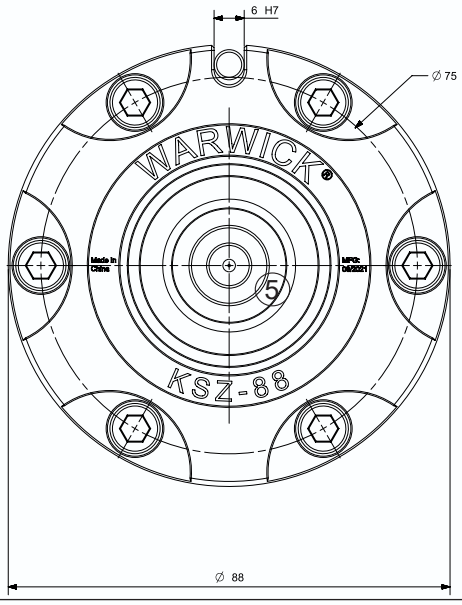

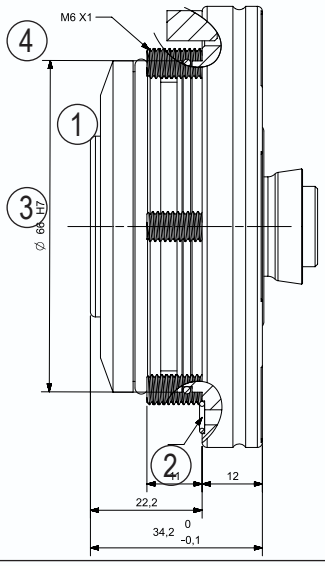

KSZ - 88 - T1

Stazione di serraggio unidirezionale/
1-way Clamping Station

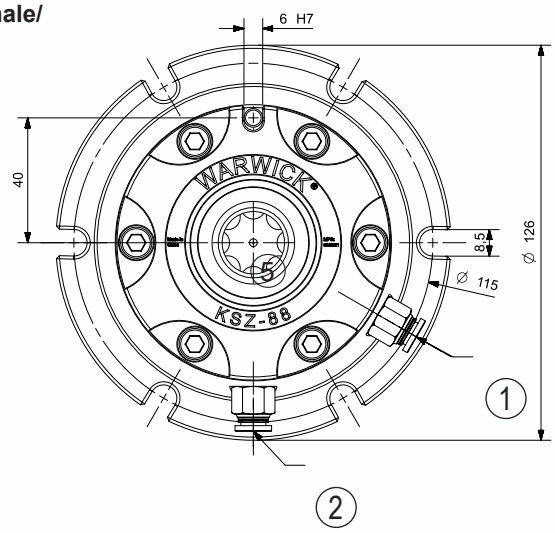

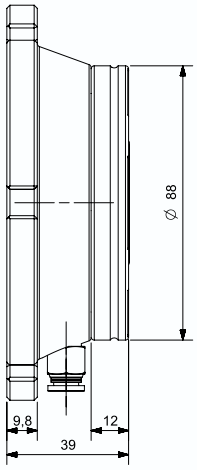

KSZ - 88 - T2

Stazione di serraggio a 2 vie
2-way Clamping Station

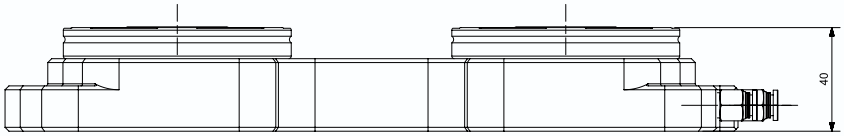

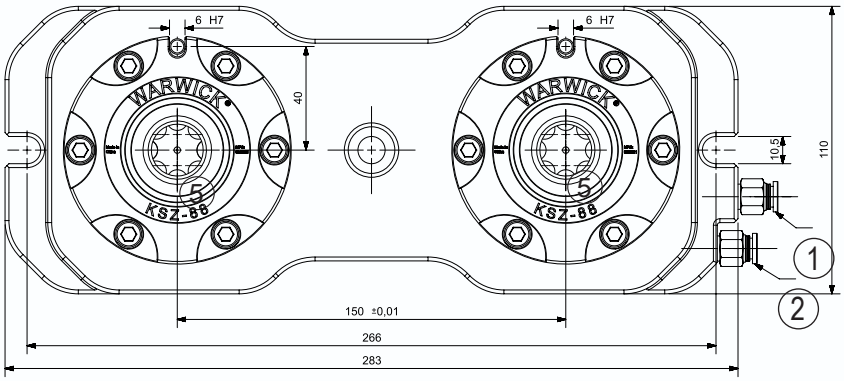

1 The intake air is unlocked

2 /The intake air increases the clamping force

3 Installation position size /Fixed lock

4 screw

5 /Clean stomata

KSZ - 88 - T3

3-way Clamping Station

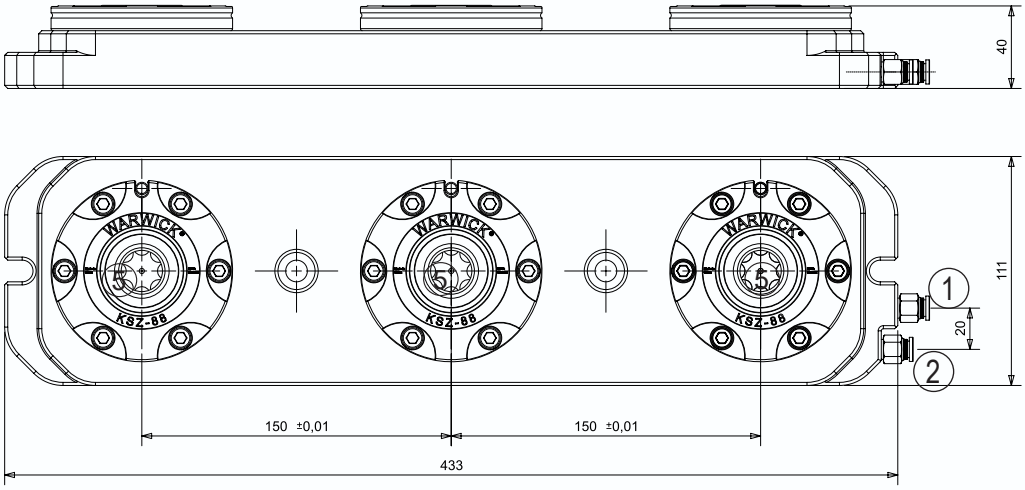

KSZ - 88 - R3

3-way Clamping Station

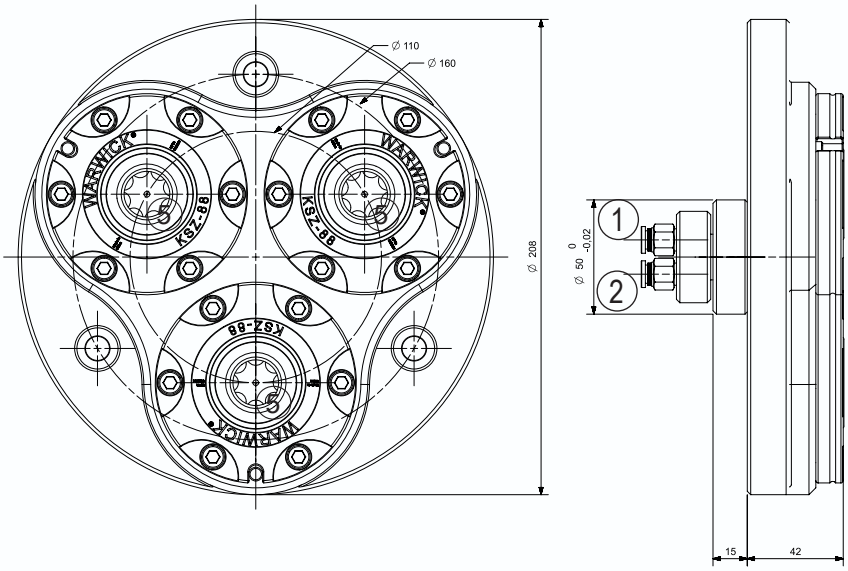

KSZ - 88 - 2N

2-way Clamping Station

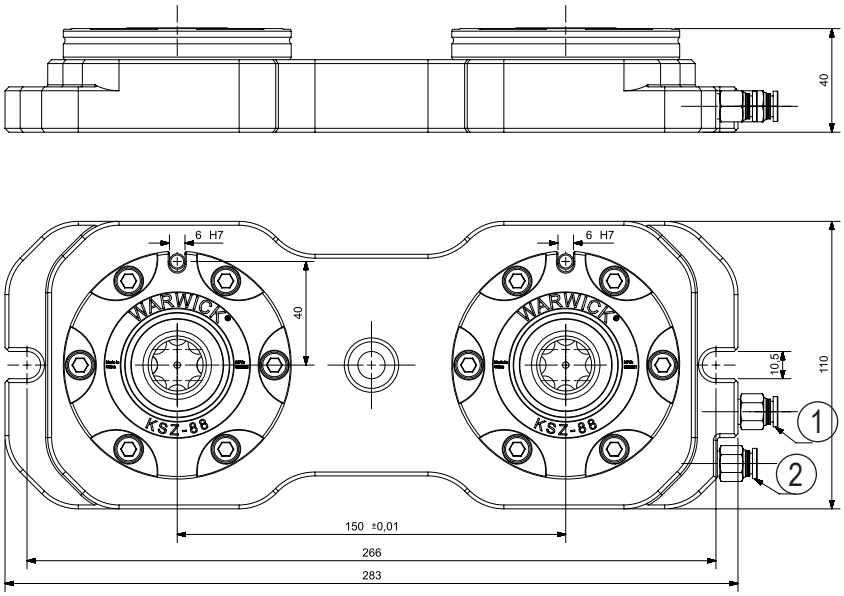

SIMPLE - KSZ - 88

Quick-change Pallet Systems

Technical data

Description	ID	Center distance [mm]	Repeat accuracy [mm]	Closing/opening time [S]	6.8 bar clamping force [kN]	Spring locking force [kN]	Operating pressure [bar]	Stock	Weight [kg]
KSZ88	10000	-	0.005	0.6	6.5	2.1	5.5-9	●	0.9
KSZ88-T1	10010	-	0.005	0.6	6.5	2.1	5.5 - 9	●	2.5
KSZ88-T2	10020	150	0.005	0.6	2 X 6.5	2 X 3	5.5 - 9	●	7.5
KSZ88-T3	10030	150	0.005	0.6	3 X 6.5	3 X 2.1	5.5 - 9	●	11.5
KSZ88-R3	10040	Φ110	0.005	0.6	3 X 6.5	3 X 2.1	5.5 - 9	-	8.5
KSZ88-2N	10050	150	0.005	0.6	N X 6.5	N X 2.1	5.5 - 9	●	6.9

• See pages B3 and B4 for detailed descriptions of the above device versions.
• From page B, match the system and top jaws.

Scope of delivery

Clamping table, including SIMPLE-KSZ 88 module, operating manual;
no clamping pins or indexing pins

6.8 bar clamping force

A clamping force is generated simultaneously using a 6.8 bar pressure and a spring assembly, which is measured by a sensor.

The clamping force of the spring assembly

Only a spring assembly is used to generate a clamping force, which is measured by a sensor.

TPC23 - 88 - T1 Quick-change Pallet Module

Description	ID	Material	Plane parallelism [mm]	Height H [mm]	Weight [kg]
TPC 23 - 88 - T1A	10400-A	Aluminum	0.05	25	2.5
TPC 23 - 88 - T1S	10400-S	Steel	0.02	20	5.5

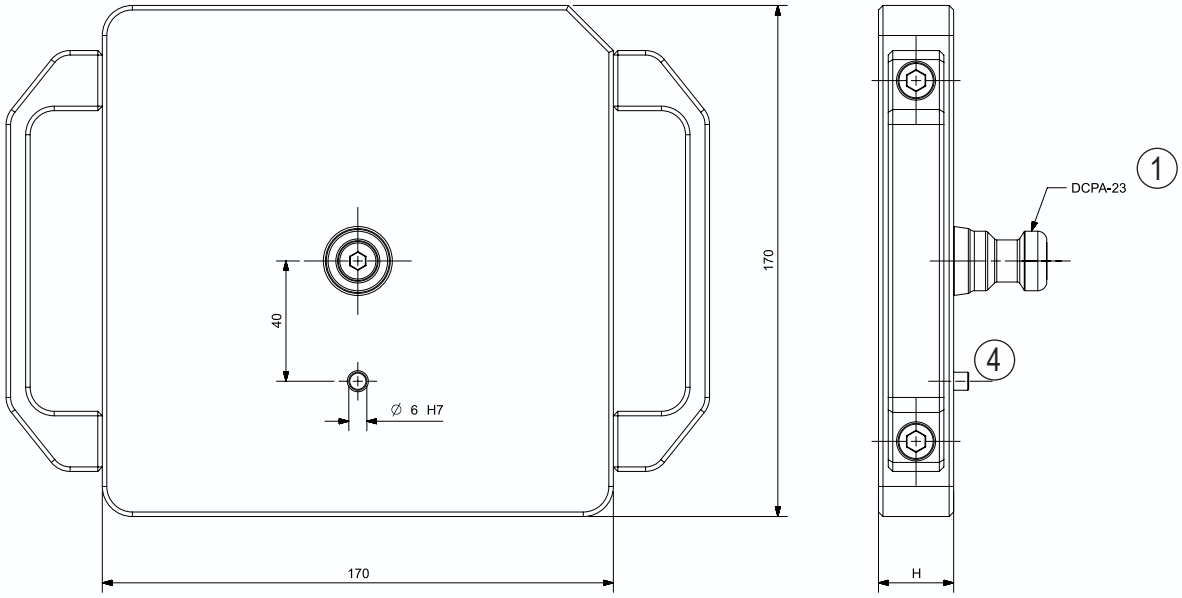

TPC23 - 88 - T1 Quick-change Pallet Module

Description	ID	Material	Plane parallelism [mm]	Height H [mm]	Weight [kg]
TPC 23 - 88 - T2A	10421-A	Aluminum	0.05	25	4.2
TPC 23 - 88 - T2S	10421-S	Steel	0.02	20	9.5

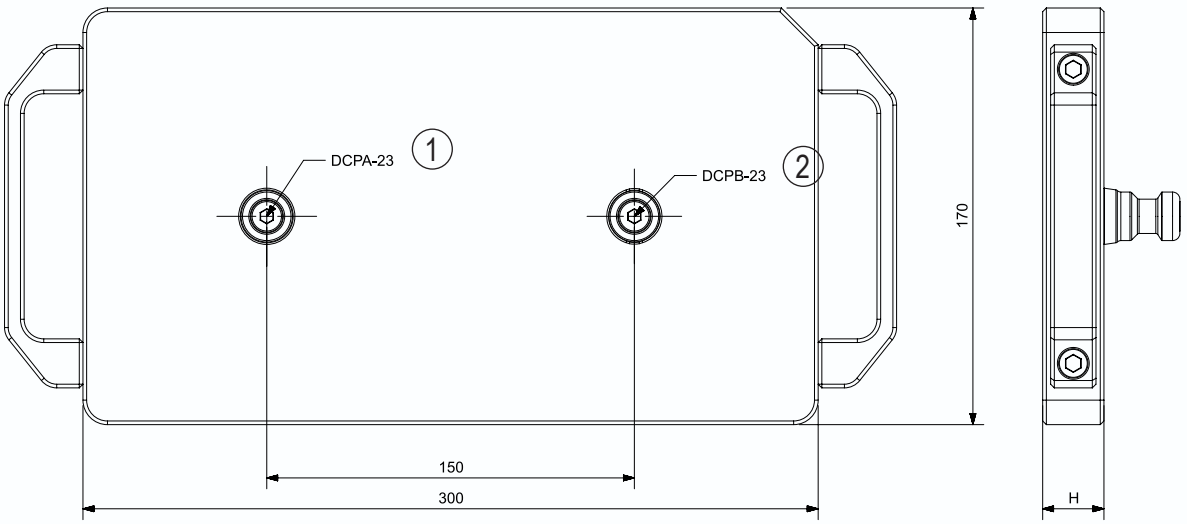

TPC23 - 88 - T3 Quick-change Pallet Module

Description	ID	Material	Plane parallelism [mm]	Height H [mm]	Weight [kg]
TPC 23 - 88 - T3A	10400-A	Aluminum	0.05	25	6.2
TPC 23 - 88 - T3S	10400-S	Steel	0.02	20	14.3

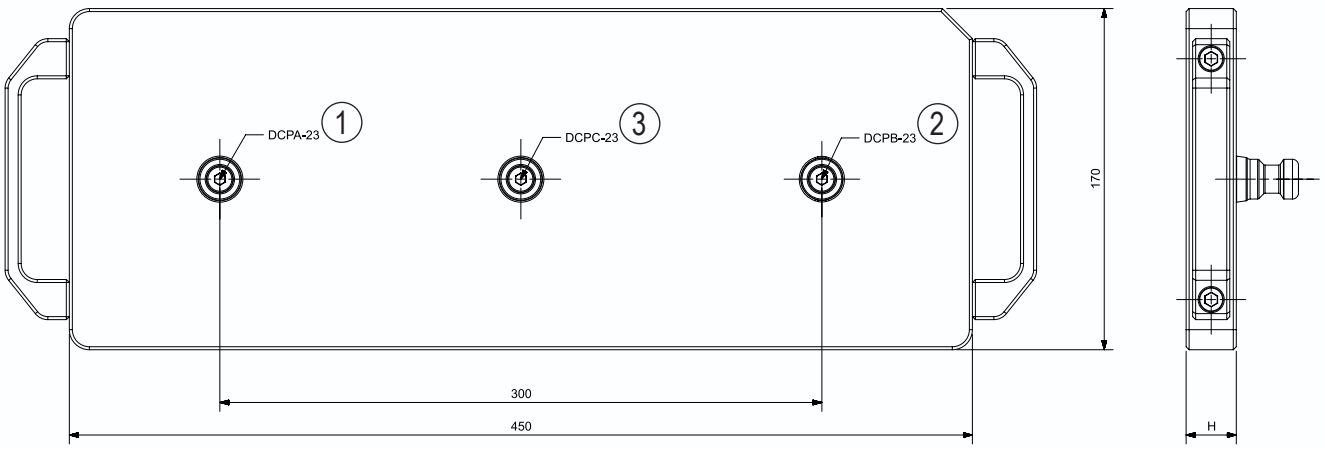

TPC23 - 88 - T4 Quick-change Pallet Module

Description	ID	Material	Plane parallelism [mm]	Height H [mm]	Weight [kg]
TPC 23 - 88 - T2A	10441-A	Aluminum	0.05	25	9
TPC 23 - 88 - T2S	10441-S	Steel	0.02	20	20.5

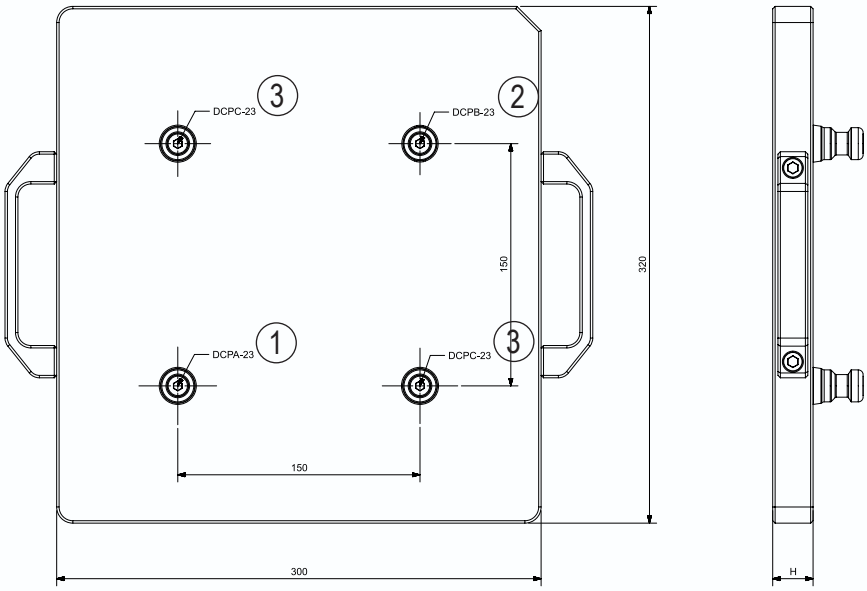

TPC23 - 88 - T6 Quick-change Pallet Module

Description	ID	Material	Plane parallelism [mm]	Height H [mm]	Weight [kg]
TPC 23 - 88 - T6A	10451-A	Aluminum	0.05	25	12.5
TPC 23 - 88 - T6S	10451-S	Steel	0.02	20	25.5

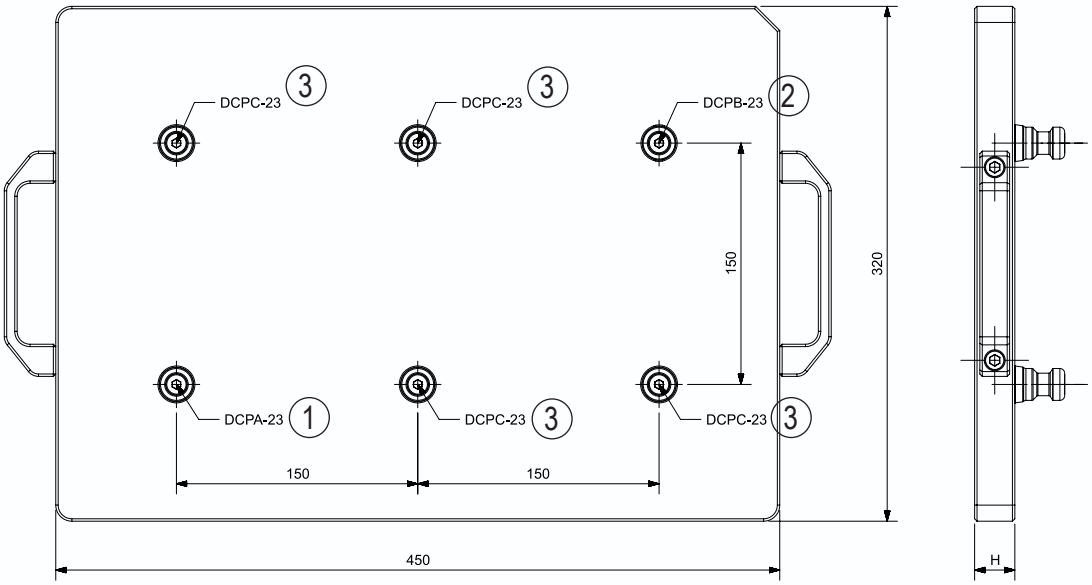

DCP - 23 Clamping Pins

Description	ID	Material	Holding force M8 [kN]	Holding force M10 [kN]	Holding force M12 [kN]	Version	Weight [kg]
DCPA - 23	10601	Stainless steel	22.5			Positioning pin	0.15
DCPB - 23	10602	Stainless steel	22.5			directional pin	0.15
DCPC - 23	10603	Stainless steel	22.5			Clamping pin	0.15

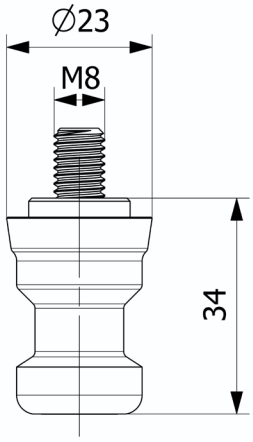

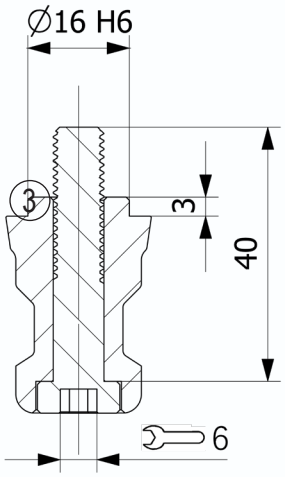

KSZ - 90

Quick-change Pallet Module

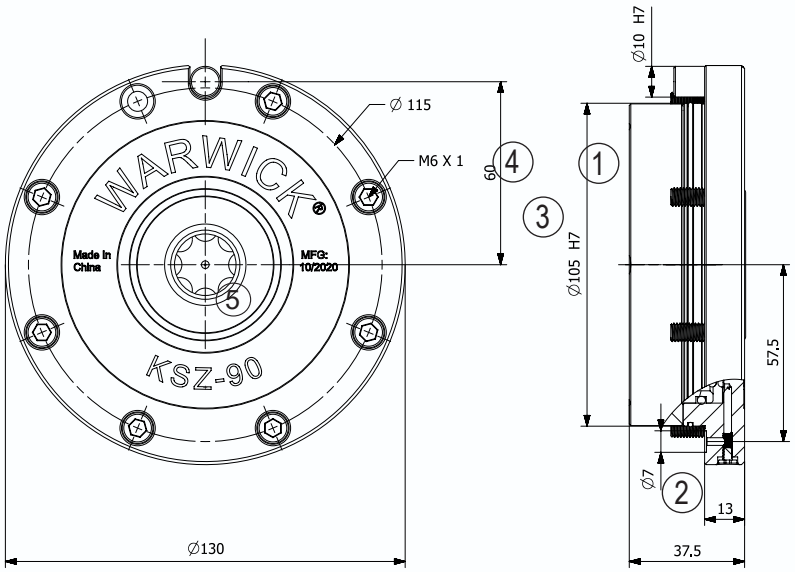

KSZ - 90 - T1

1-way Clamping Station

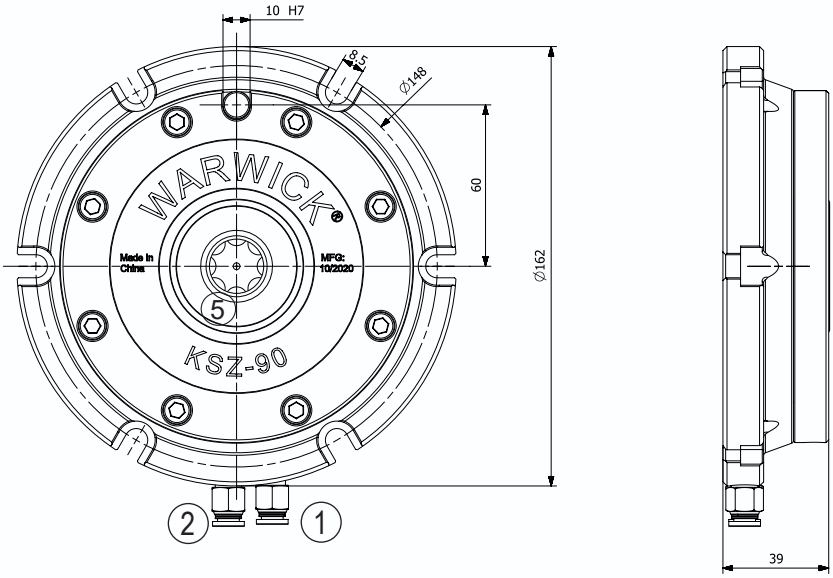

KSZ - 90 - T2

2-way Clamping Station

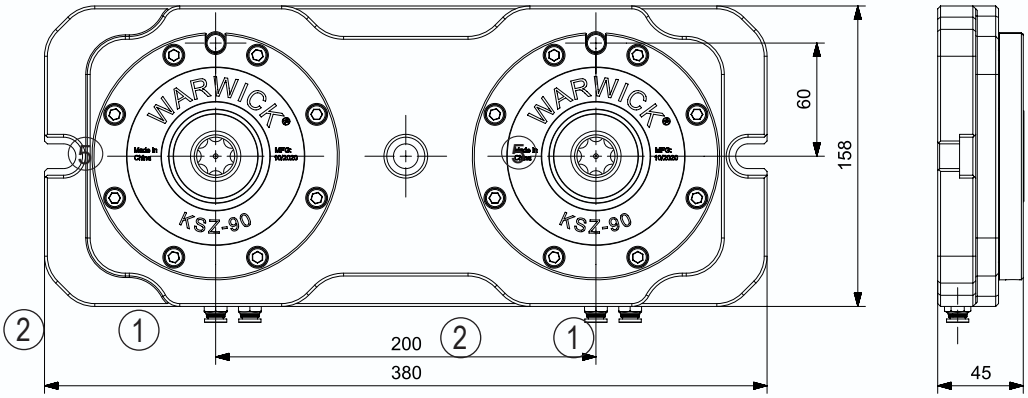

KSZ - 90 - T3

3-way Clamping Station

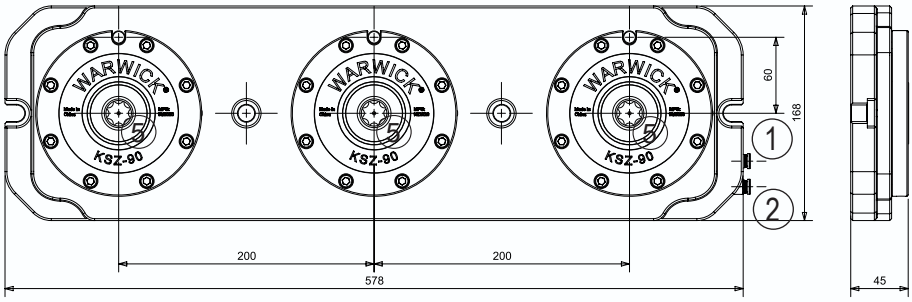

KSZ - 90 - T4

4-way Clamping Station

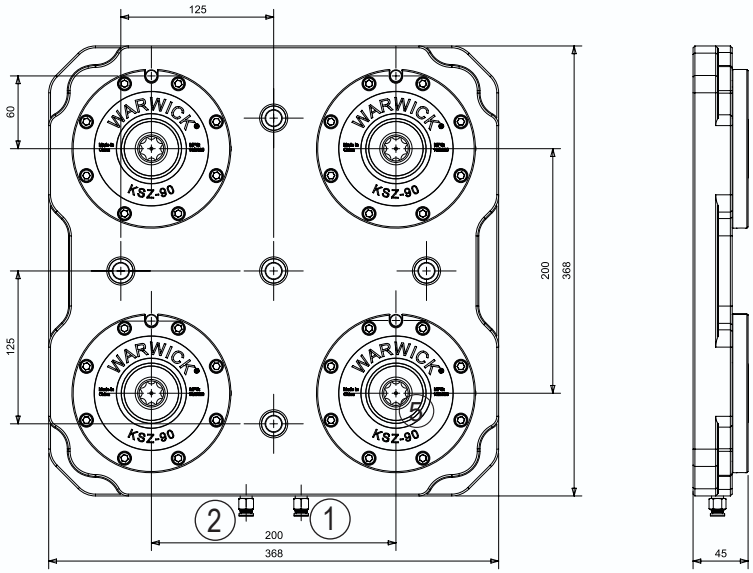

KSZ - 90 - T6

6-way Clamping Station

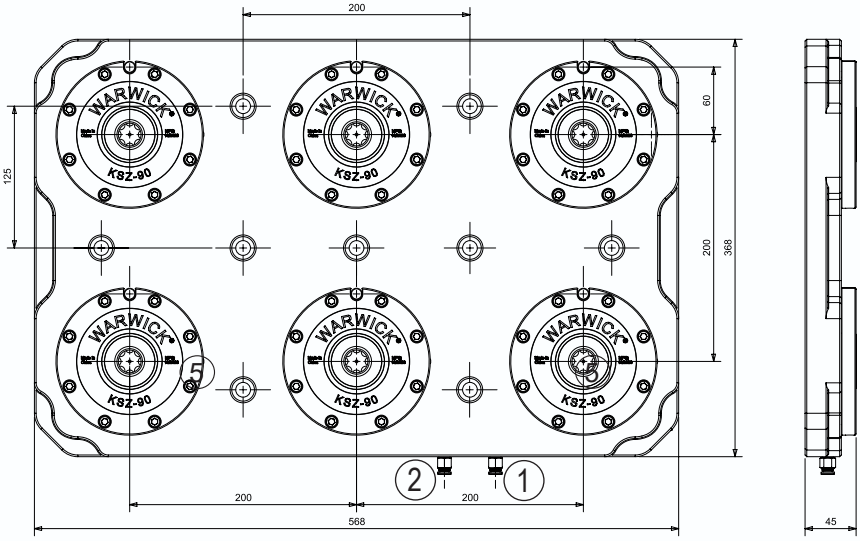

Technical data

Description	ID	Center distance [mm]	Repeat accuracy [mm]	Closing/opening time [S]	6.8 bar clamping force [kN]	Spring locking force [kN]	Operating pressure [bar]	Stock	Weight [kg]
KSZ90	10000	-	0.005	0.6	14	5.5	5.5-9	●	2.7
KSZ90-T1	10010	-	0.005	0.6	14	5.5	5.5 - 9	●	6.5
KSZ90-T2	10020	200	0.005	0.6	2 X 14	2 X 5.5	5.5 - 9	●	15.2
KSZ90-T3	10030	200	0.005	0.6	3 X 14	3 X 5.5	5.5 - 9	●	28.5
KSZ90-T4	10040	200	0.005	0.6	4 X 14	4 X 5.5	5.5 - 9	●	49
KSZ90-T6	10050	200	0.005	0.6	6 X 14	6 X 5.5	5.5 - 9	●	68

- See pages B3 and B4 for detailed descriptions of the above device versions.
- From page B, match the system and top jaws.

Scope of delivery

Clamping table, including SIMPLE-KSZ 88 module, operating manual;
no clamping pins or indexing pins

6.8 bar clamping force

A clamping force is generated simultaneously using a 6.8 bar pressure and a spring assembly, which is measured by a sensor.

The clamping force of the spring assembly

Only a spring assembly is used to generate a clamping force, which is measured by a sensor.

TPC23 - 90 - T1 Quick-change Pallet Module

Description	ID	Material	Plane parallelism [mm]	Height H [mm]	Weight [kg]
TPC 23 - 90 - T1A	10400-A	Aluminum	0.05	25	2.5
TPC 23 - 90 - T1S	10400-S	Steel	0.02	20	5.5

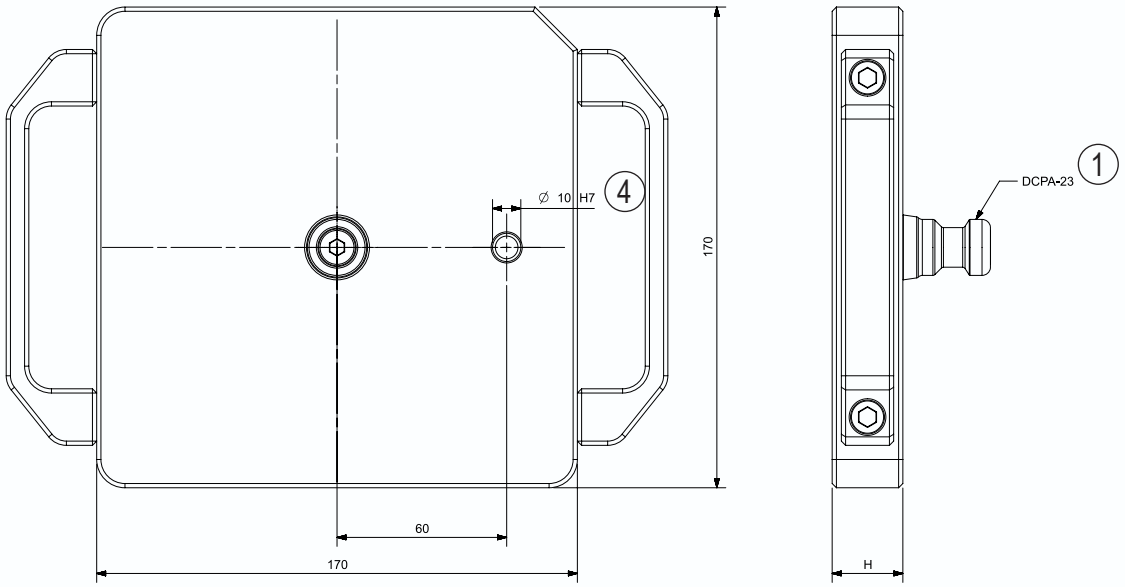

TPC23 - 90 - T2 Quick-change Pallet Module

Description	ID	Material	Plane parallelism [mm]	Height H [mm]	Weight [kg]
TPC 23 - 90 - T2A	10420-A	Aluminum	0.05	25	6.5
TPC 23 - 90 - T2S	10420-S	Steel	0.02	20	13.5

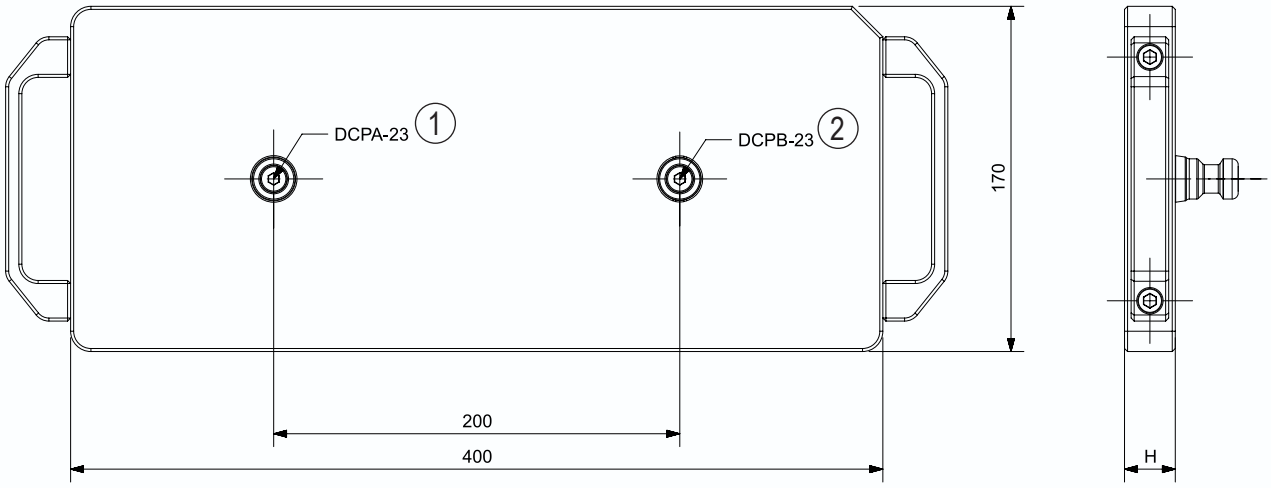

TPC23 - 90 - T3 Quick-change Pallet Module

Description	ID	Material	Plane parallelism [mm]	Height H [mm]	Weight [kg]
TPC 23 - 90 - T3A	10430-A	Aluminum	0.05	25	12.5
TPC 23 - 90 - T3S	10430-S	Steel	0.02	20	24.5

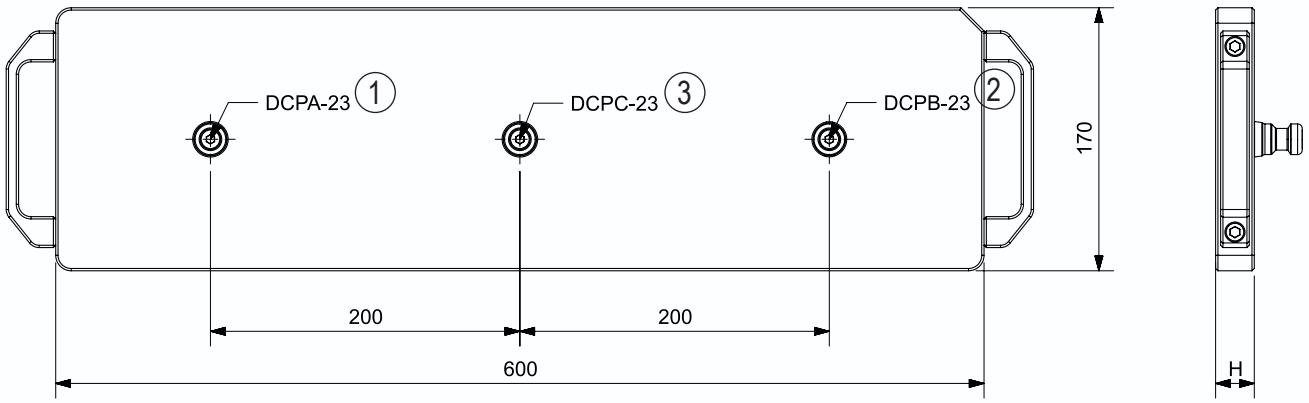

TPC23 - 90 - T4 Quick-change Pallet Module

Description	ID	Material	Plane parallelism [mm]	Height H [mm]	Weight [kg]
TPC 23 - 90 - T4A	10420-A	Aluminum	0.05	25	16.5
TPC 23 - 90 - T4S	10420-S	Steel	0.02	20	29.5

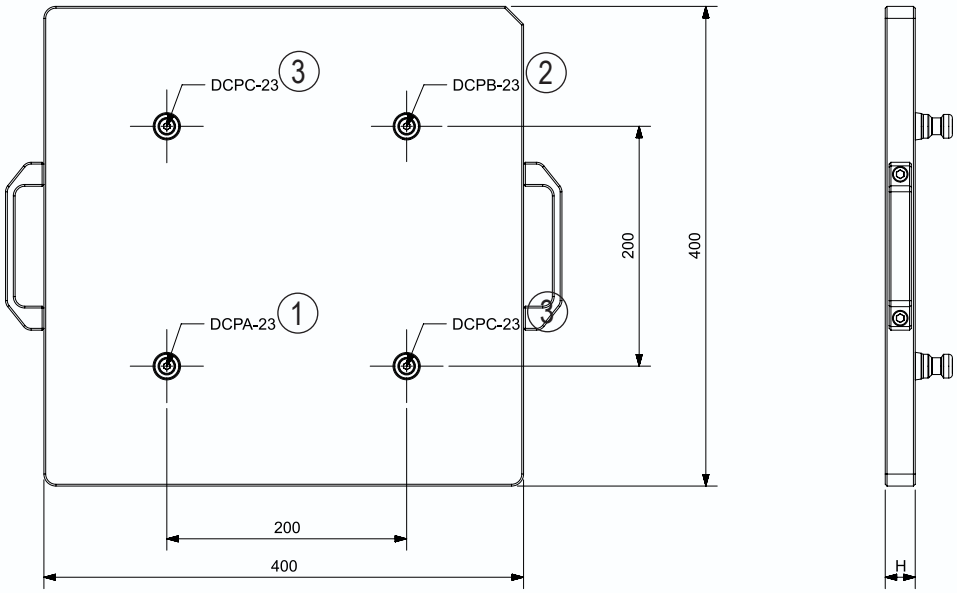

TPC23 - 90 - T6 Quick-change Pallet Module

Description	ID	Material	Plane parallelism [mm]	Height H [mm]	Weight [kg]
TPC 23 - 90 - T6A	10450-A	Aluminum	0.05	25	30.3
TPC 23 - 90 - T6S	10450-S	Steel	0.02	20	48.6

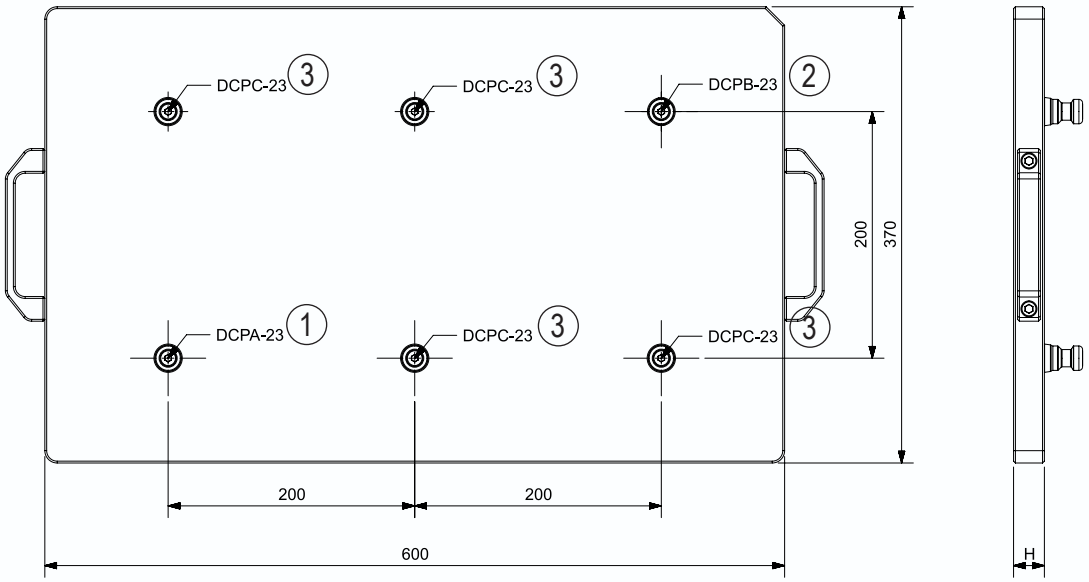

DCP - 23 Clamping Pins

Description	ID	Material	Holding force M8 [kN]	Holding force M10 [kN]	Holding force M12 [kN]	Version	Weight [kg]
DCPA - 23	10601	Stainless steel	22.5			Positioning pin	0.15
DCPB - 23	10602	Stainless steel	22.5			directional pin	0.15
DCPC - 23	10603	Stainless steel	22.5			Clamping pin	0.15

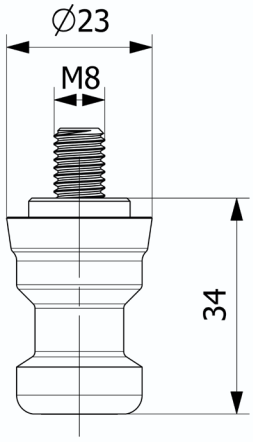

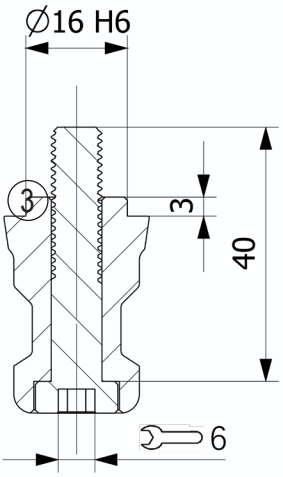

SIMPLE - KSZ - 115

Quick-change Pallet Systems

KSZ - 115

Quick-change Pallet Module

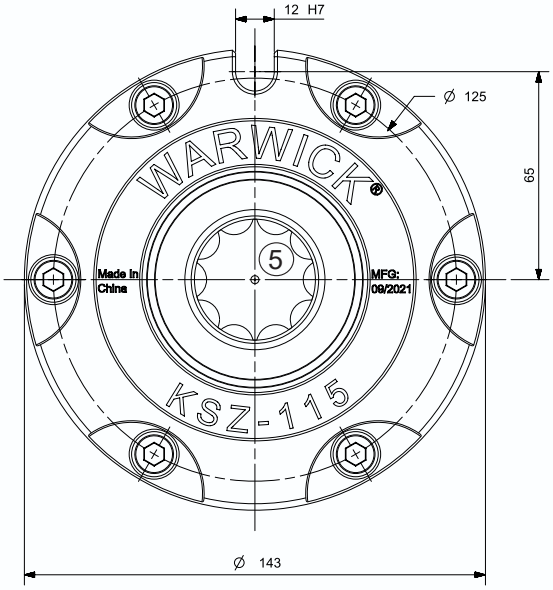

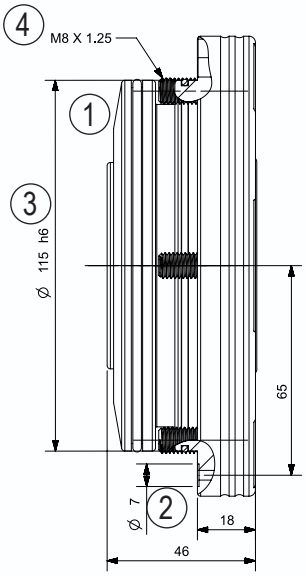

KSZ - 115 - T1

1-way Clamping Station

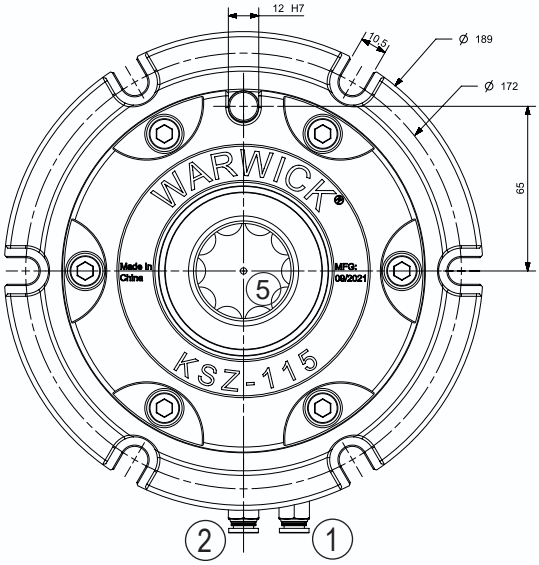

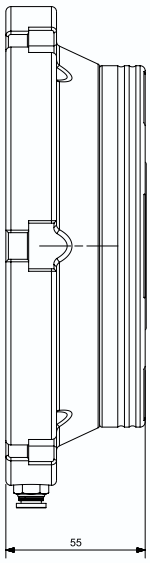

KSZ - 115 - T2

2-way Clamping Station

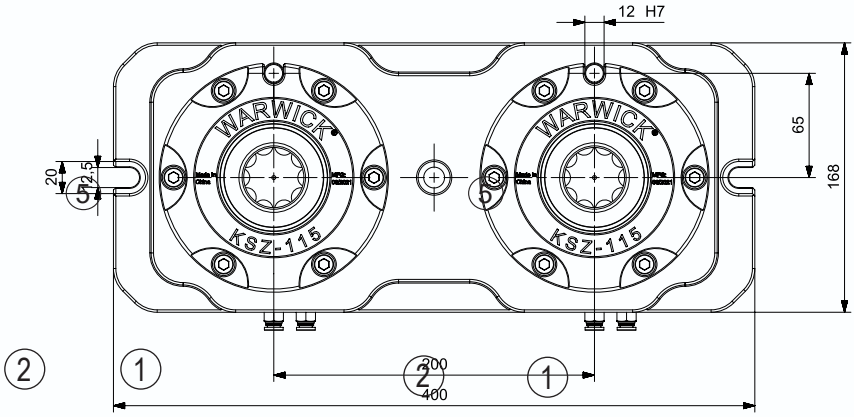

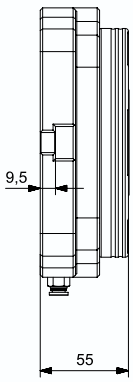

KSZ - 115 - T3

3-way Clamping Station

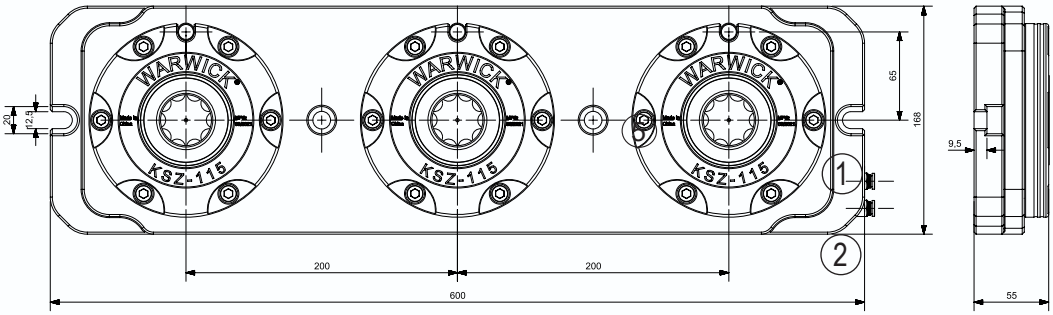

KSZ - 115 - T4

4-way Clamping Station

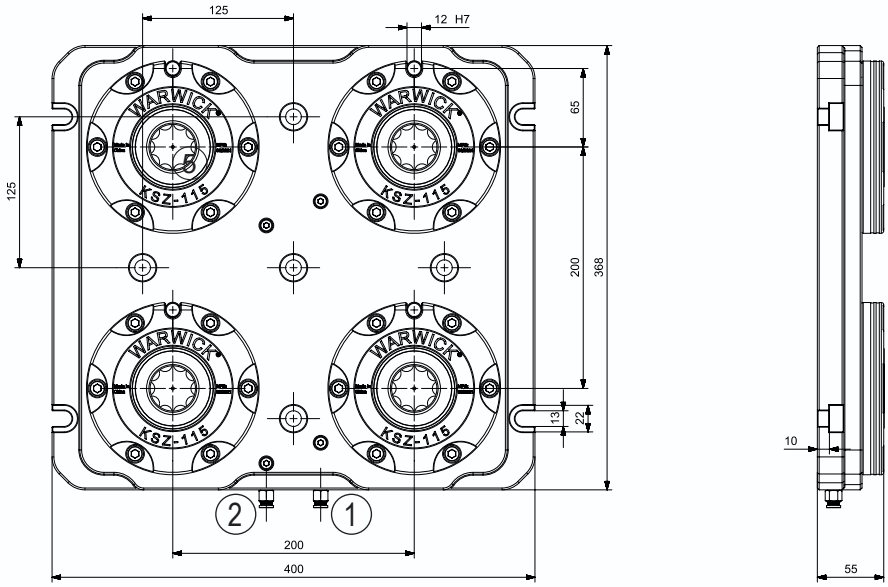

KSZ - 115 - T6

6-way Clamping Station

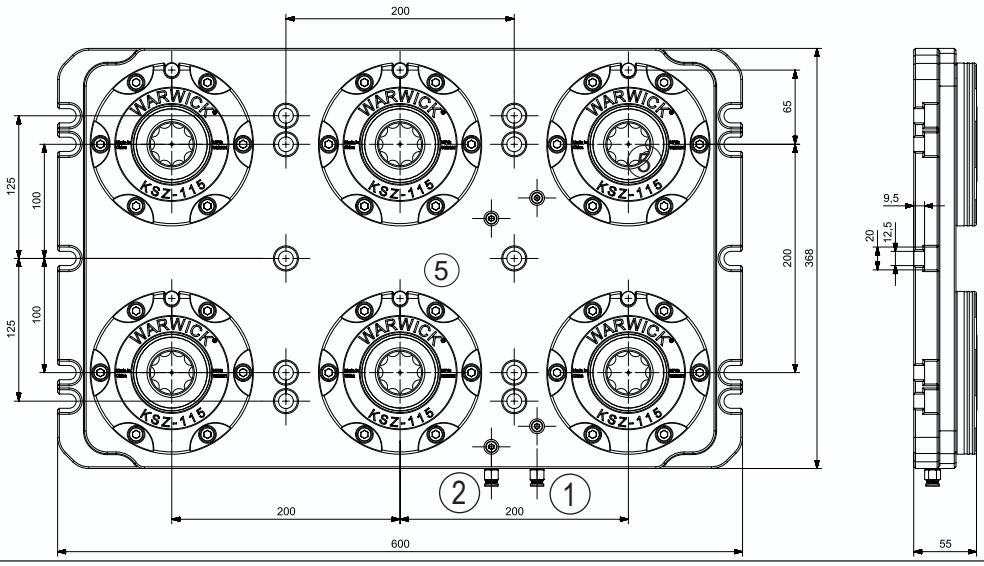

Technical data

Description	ID	Center distance [mm]	Repeat accuracy [mm]	Closing/opening time [S]	6.8 bar clamping force [kN]	Spring locking force [kN]	Operating pressure [bar]	Stock	Weight [kg]
KSZ115	11000	-	0.005	0.6	21	6	5.5-9	●	4.2
KSZ115-T1	11010	-	0.005	0.6	21	6	5.5 - 9	●	8.5
KSZ115-T2	11020	200	0.005	0.6	2 X 21	2 X 6	5.5 - 9	●	25
KSZ115-T3	11030	200	0.005	0.6	3 X 21	3 X 6	5.5 - 9	●	41
KSZ115-T4	11040	200	0.005	0.6	4 X 21	4 X 6	5.5 - 9	●	56
KSZ115-T6	11050	200	0.005	0.6	6 X 21	6 X 6	5.5 - 9	●	79

- See pages B3 and B4 for detailed descriptions of the above device versions.
- From page B, match the system and top jaws.

Scope of delivery

Clamping table, including SIMPLE-KSZ 88 module, operating manual;
no clamping pins or indexing pins

6.8 bar clamping force

A clamping force is generated simultaneously using a 6.8 bar pressure and a spring assembly, which is measured by a sensor.

The clamping force of the spring assembly

Only a spring assembly is used to generate a clamping force, which is measured by a sensor.

TPC40 - 115 - T1 Quick-change Pallet Module

Description	ID	Material	Plane parallelism [mm]	Height H [mm]	Weight [kg]
TPC 40 - 115 - T1A	11200-A	Aluminum	0.05	25	3
TPC 40 - 115 - T1S	11200-S	Steel	0.02	20	6

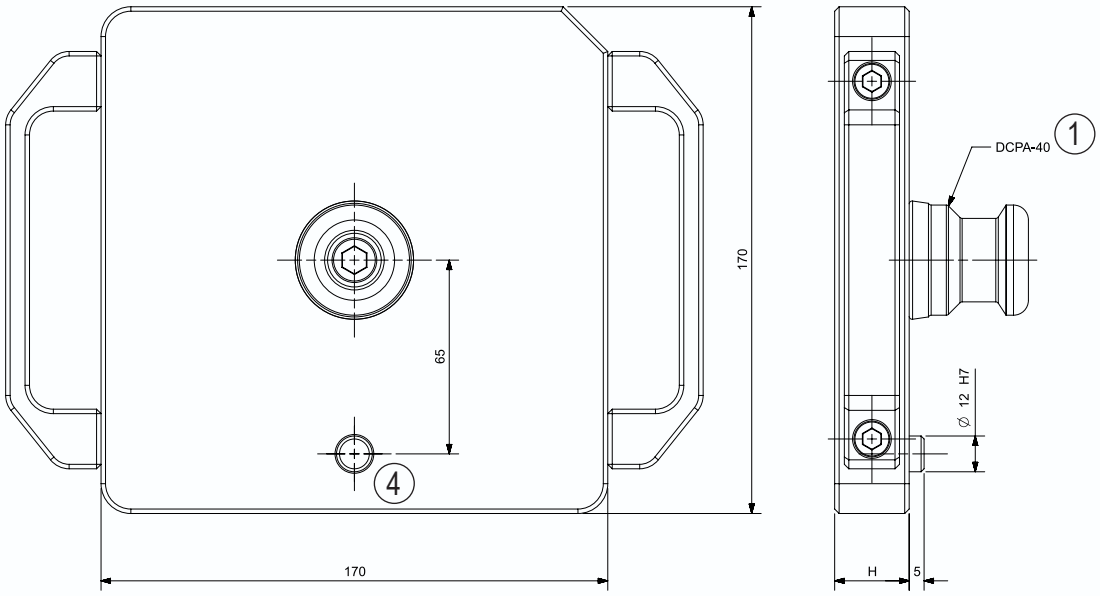

TPC40 - 115 - T2 Quick-change Pallet Module

Description	ID	Material	Plane parallelism [mm]	Height H [mm]	Weight [kg]
TPC 40 - 115 - T2A	11210-A	Aluminum	0.05	25	6.8
TPC 40 - 115 - T2S	11210-S	Steel	0.02	20	13.5

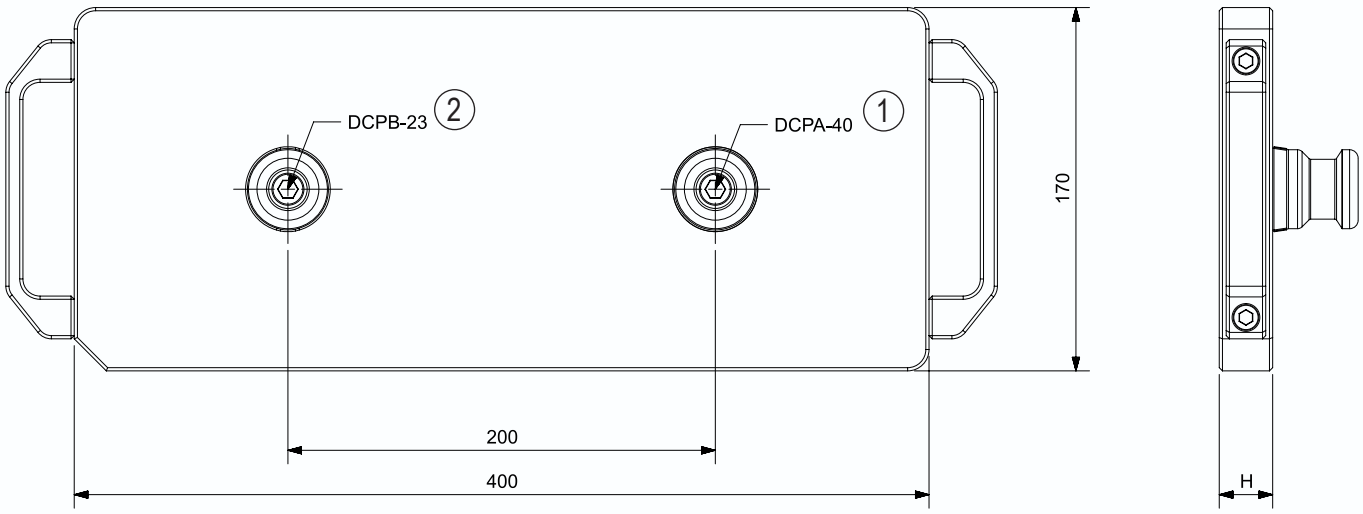

TPC40 - 115 Quick-change Pallet Module

Description	ID	Material	Plane parallelism [mm]	Height H [mm]	Weight [kg]
TPC 40 - 115 - T3A	11220-A	Aluminum	0.05	25	9.5
TPC 40 - 115 - T3S	11220-S	Steel	0.02	20	18.5

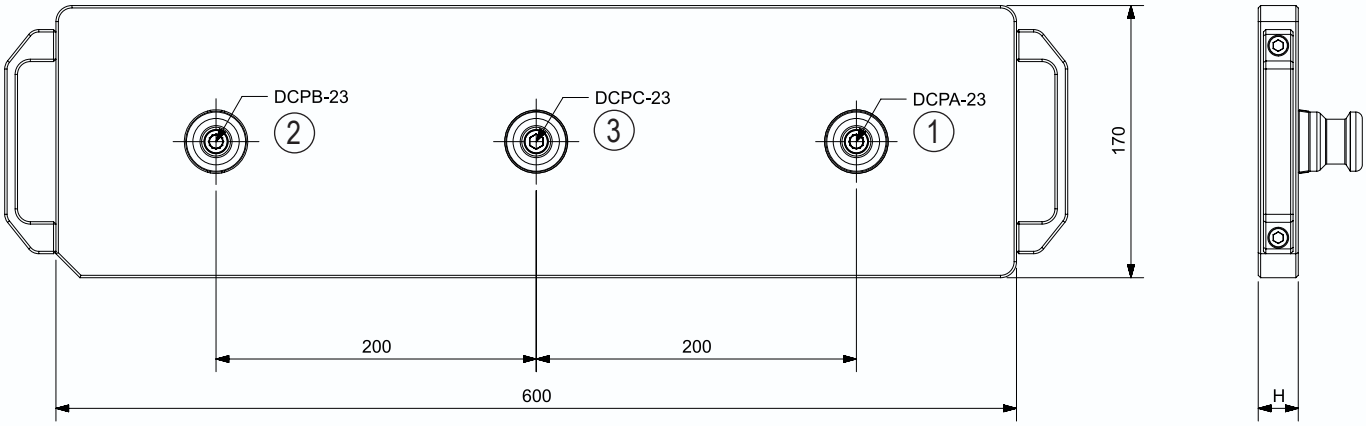

TPC40 - 115 - T4 Quick-change Pallet Module

Description	ID	Material	Plane parallelism [mm]	Height H [mm]	Weight [kg]
TPC 40 - 115 - T4A	11230-A	Aluminum	0.05	25	13.5
TPC 40 - 115 - T4S	11230-S	Steel	0.02	20	26.5

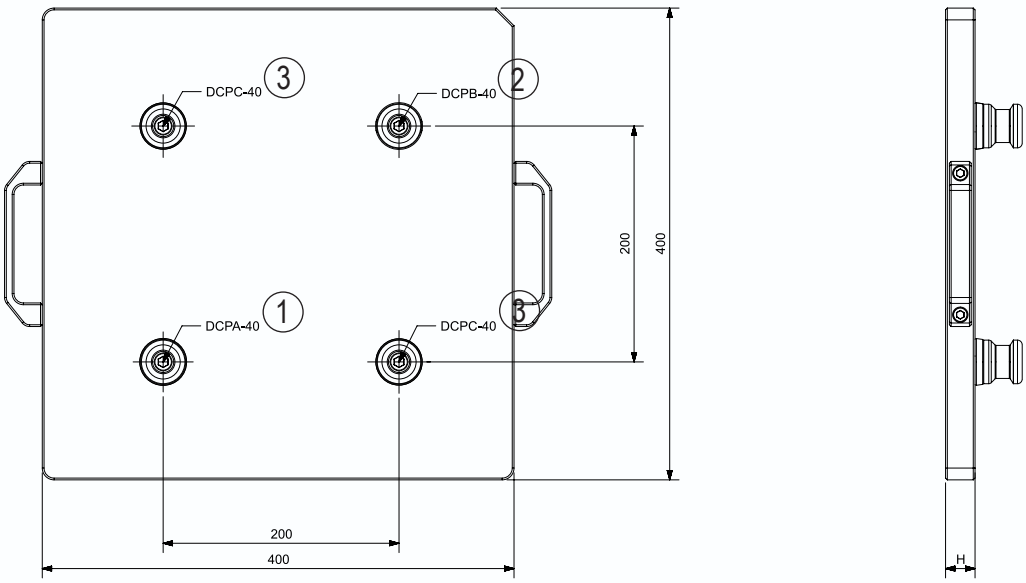

TPC23 - 90 - T6 Quick-change Pallet Module

Description	ID	Material	Plane parallelism [mm]	Height H [mm]	Weight [kg]
TPC 40 - 115 - T6A	11240-A	Aluminum	0.05	25	30.3
TPC 40 - 115 - T6S	11240-S	Steel	0.02	20	52.2

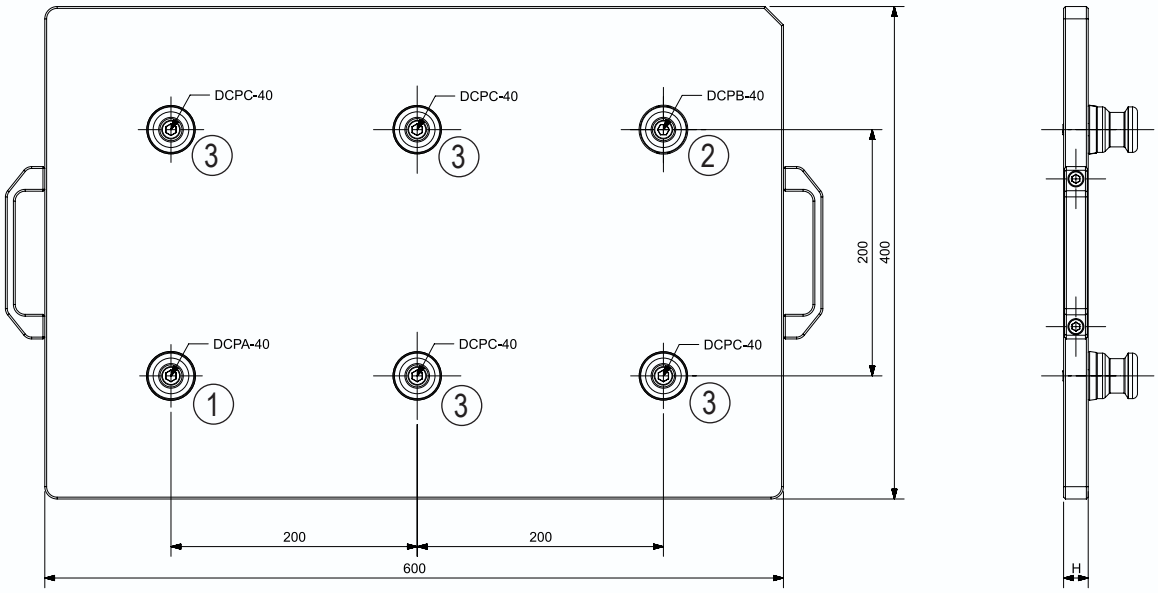

DCP - 23 Clamping Pins

Description	ID	Material	Holding force M8 [kN]	Holding force M10 [kN]	Holding force M12 [kN]	Version	Weight [kg]
DCPA - 40	10611	Stainless steel	22.5			Centering pin	0.3
DCPB - 40	10612	Stainless steel	22.5			Positioning pin	0.3
DCPC - 40	10613	Stainless steel	22.5			Clamping pin	0.3

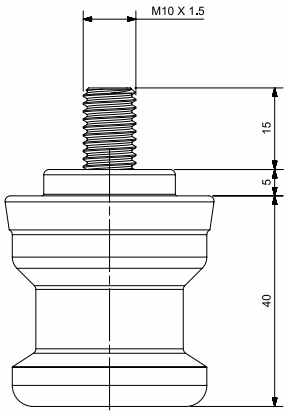

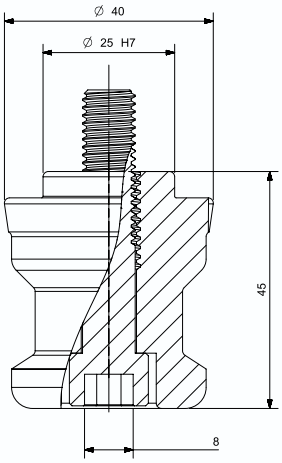

SIMPLE - KSZ90-T2-LS

Quick-change Pallet Systems

LS Quick-change Pallet Systems

Description	ID	Center distance [mm]	Repeat accuracy [mm]	Closing/opening time [S]	0.68 bar clamping force [kN]	Spring locking force [kN]	Operating pressure [bar]	Stock	Weight [kg]
KSZ90-T2-LS	10021	-	0.005	0.6	2 X 14	2 X 5.5	5.5-9	●	34.5

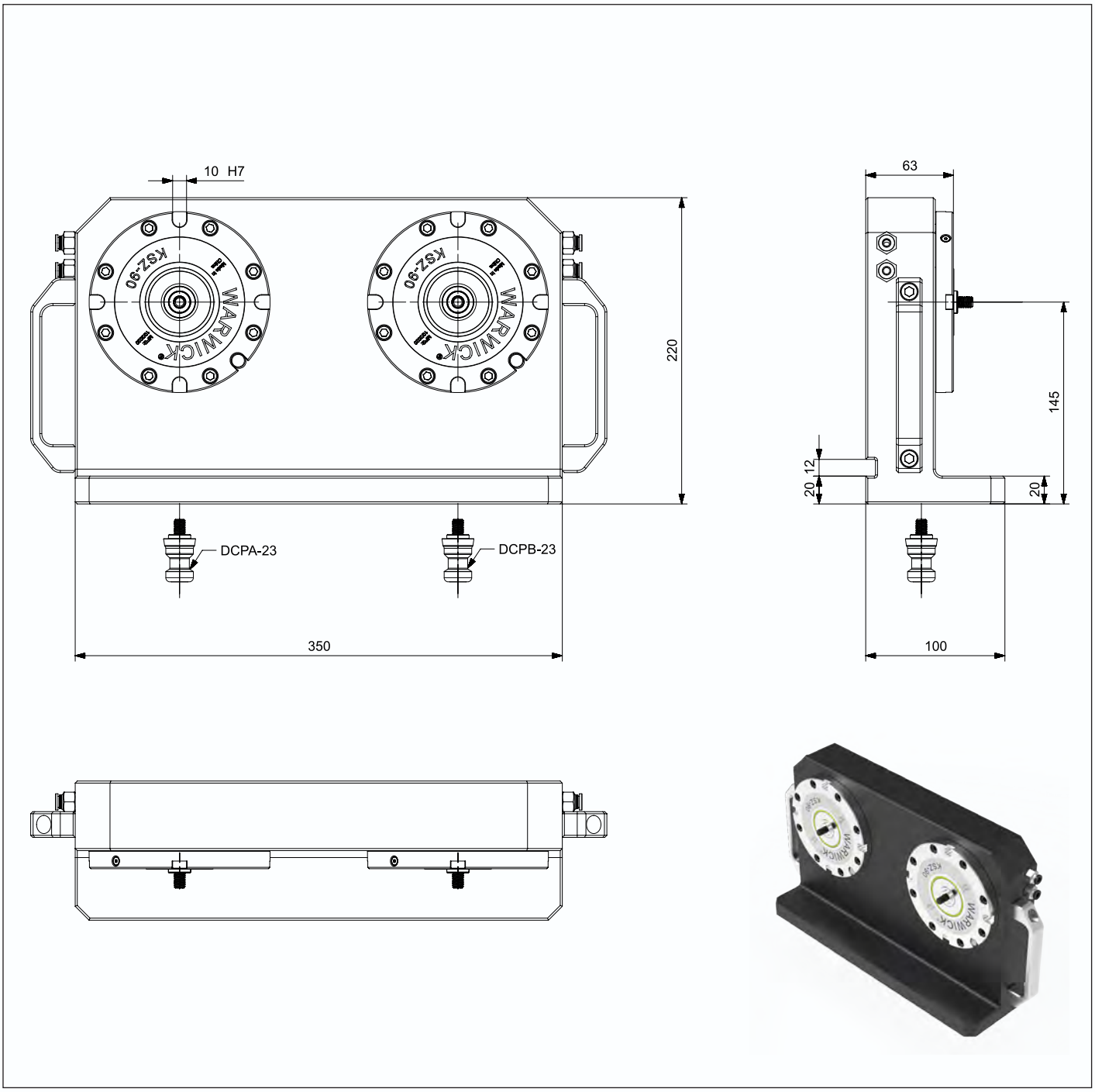

LS Quick-change Pallet Systems

Description	ID	Center distance [mm]	Repeat accuracy [mm]	Closing/opening time [S]	0.68 bar clamping force [kN]	Spring locking force [kN]	Operating pressure [bar]	Stock	Weight [kg]
KSZ115-T2-LS	11021	-	0.005	0.6	2 X 21	2 X 6	5.5-9	●	34.5

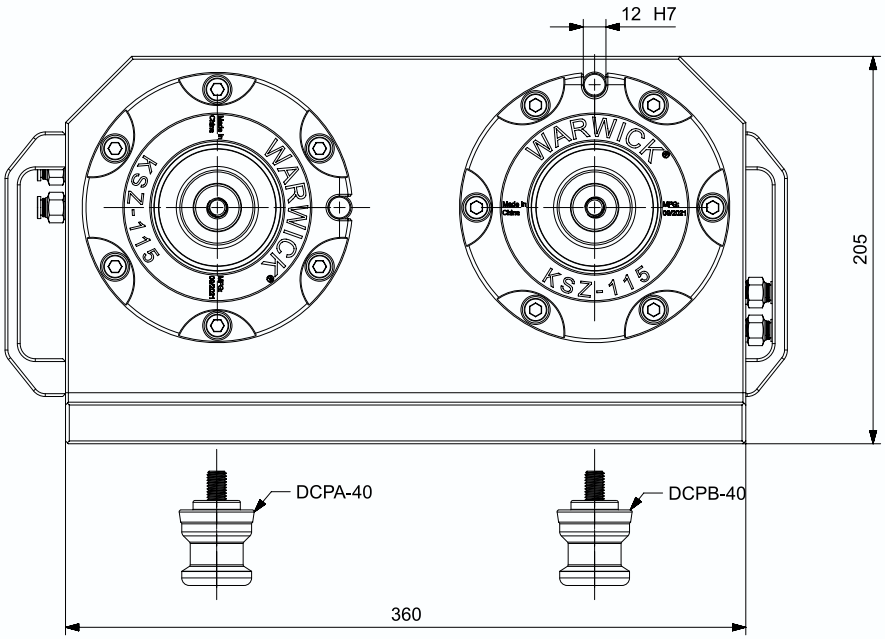

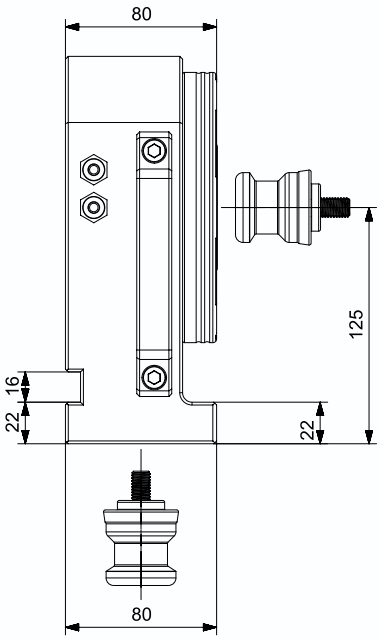

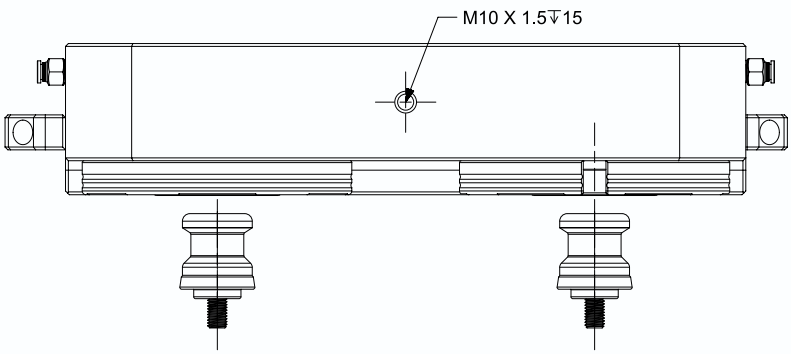

SIMPLE - KSZ90-T1-L

Quick-change Pallet Systems

L Quick-change Pallet Systems

Description	ID	Center distance [mm]	Repeat accuracy [mm]	Closing/opening time [S]	0.68 bar clamping force [kN]	Spring locking force [kN]	Operating pressure [bar]	Stock	Weight [kg]
KSZ90-T1-L	10030	-	0.005	0.6	14	5.5	5.5-9	●	22.5

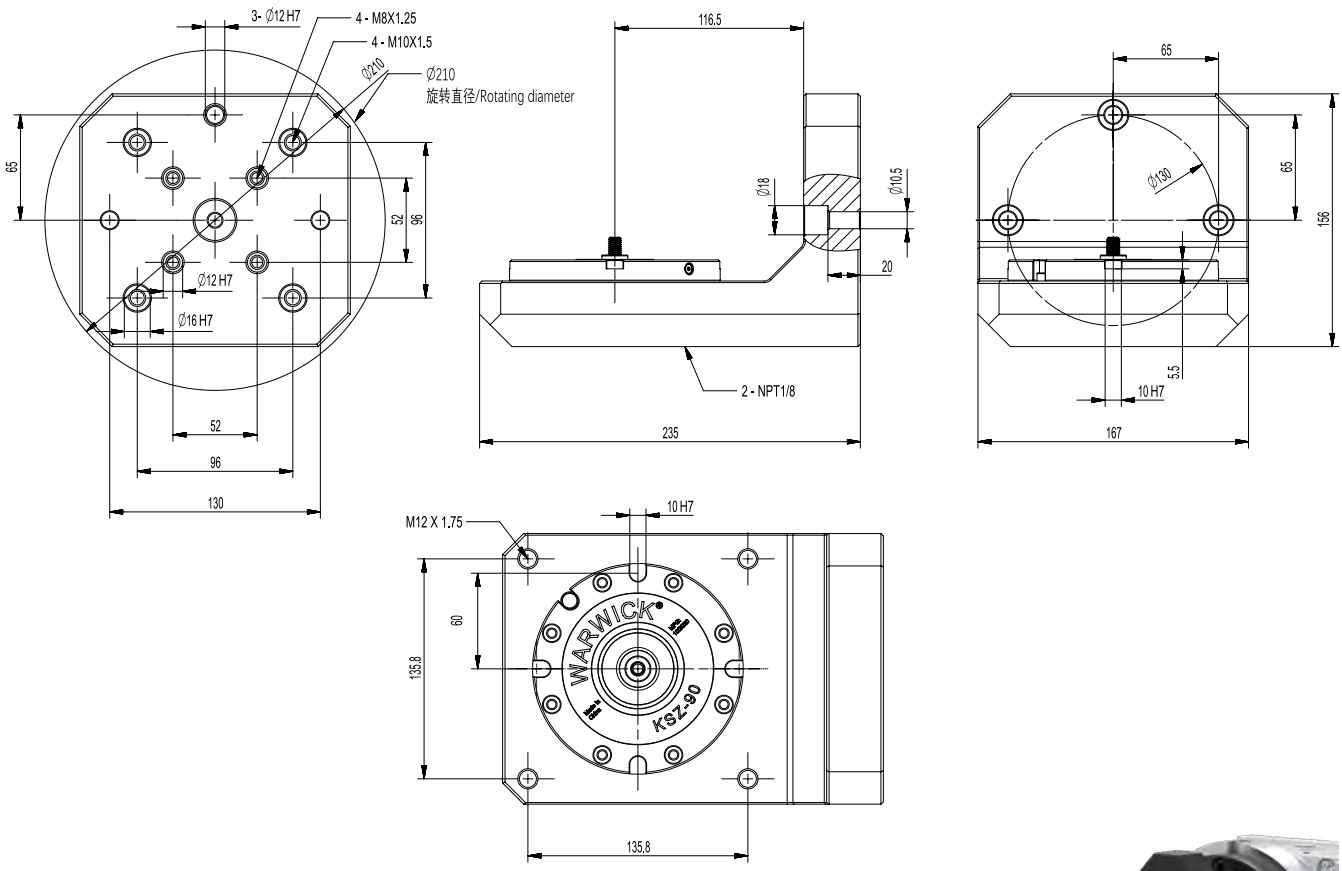

L Quick-change Pallet Systems

Description	ID	Center distance [mm]	Repeat accuracy [mm]	Closing/opening time [S]	0.68 bar clamping force [kN]	Spring locking force [kN]	Operating pressure [bar]	Stock	Weight [kg]
KSZ115-T1-L	11032	-	0.005	0.6	21	6	5.5-9	●	24.5

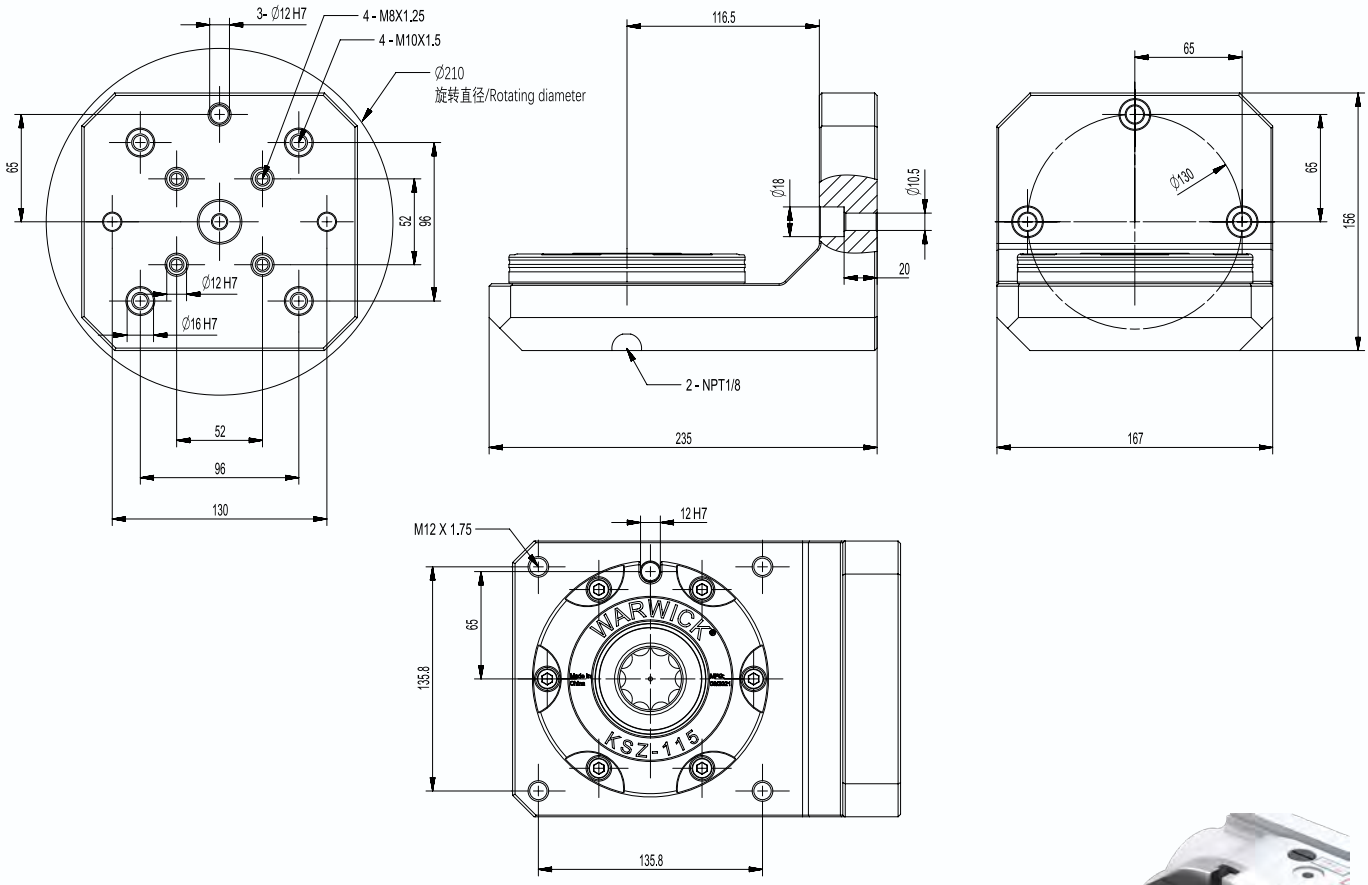

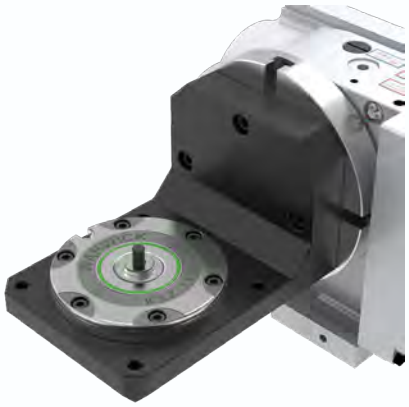

DT Dust-proof plugs

Description	ID	Material	Plane parallelism [mm]	Height H [mm]	Weight [kg]
DT 23	10605	ABS	-	-	0.1
DT 40	10615	ABS	-	-	0.2

The positioning cone of the zero point positioning is sealed to play the role of dust and waterproof.

YB Dust-proof plugs

Description	ID	Material	Plane parallelism [mm]	Height H [mm]	Weight [kg]
KSZ-YB	10607	45#	-	-	0.7

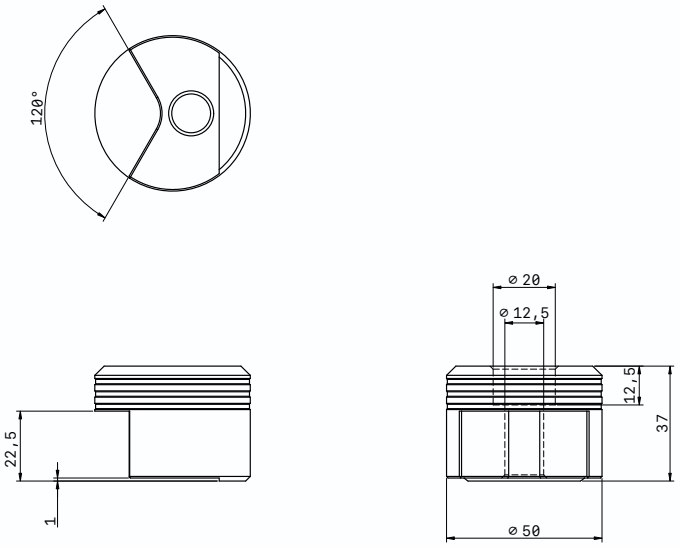

The positioning cone of the zero point positioning is sealed to play the role of dust and waterproof.

SIMPLE - KSG - 52S

Clamping Pallets

Manual Zero PointPositioning

It is positioned with 4 rivets to maintain the pull-down force for a long time and is locked by a wrench.

Scope of delivery
Clamping module, fastening screws, operable manual, clamping rivets

Technical data

Description	ID	Positioning diameter	Max. torque [N.m]	Repeat accuracy [mm]	Weight [kg]
KSG - 52S	15000	Φ16 ①	30	0.01	2.1

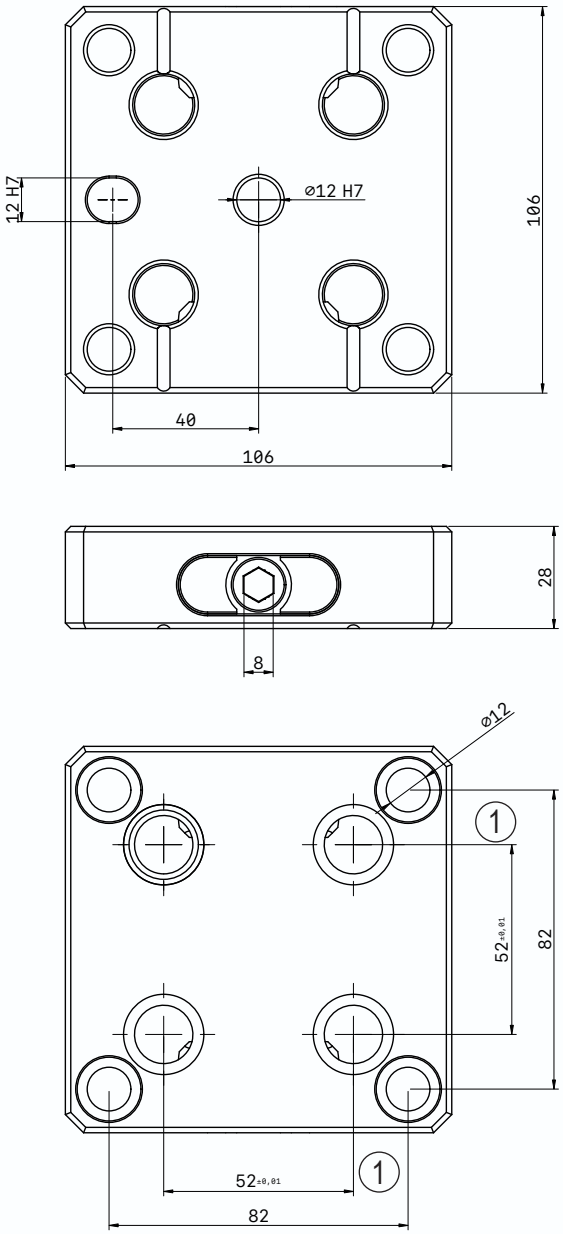

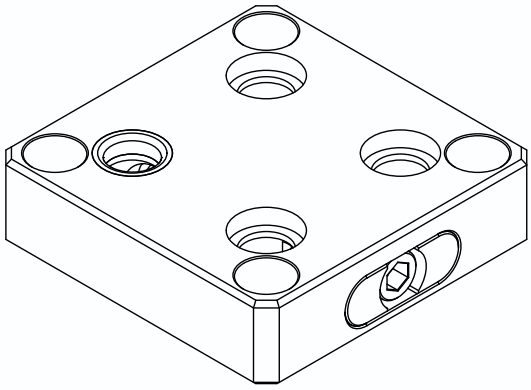

Type 52 positioning interface

Manual Zero PointPositioning

It is positioned with 4 rivets to maintain the pull-down force for a long time and is locked by a wrench.

Scope of delivery
Clamping module, fastening screws, operable manual, clamping rivets

Technical data

Description	ID	Positioning diameter	Max. torque [N.m]	Repeat accuracy [mm]	Weight [kg]
KSG - 52R	15010	Φ16 (1)	30	0.01	3.1

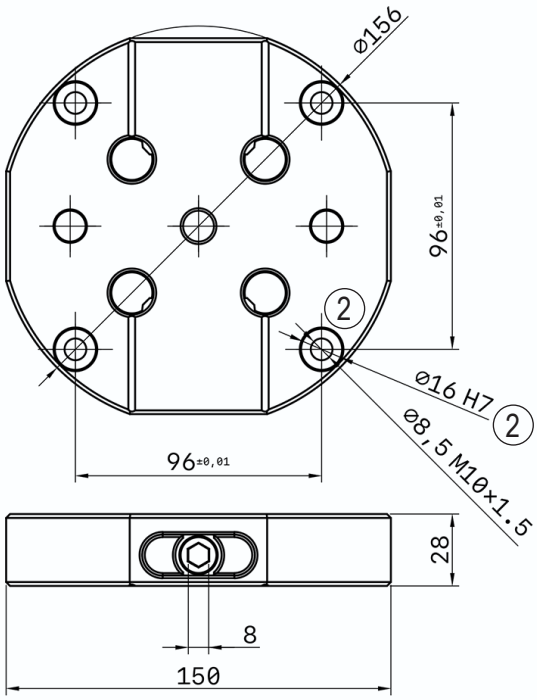

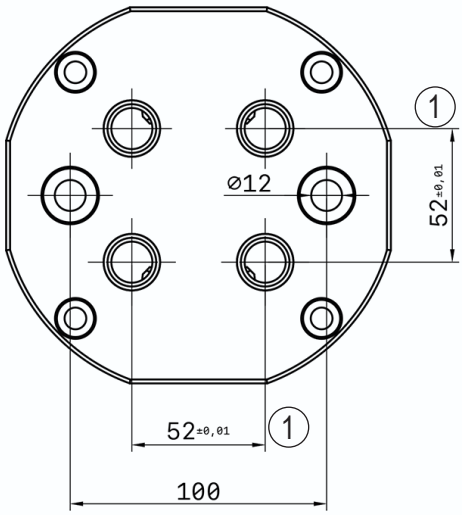

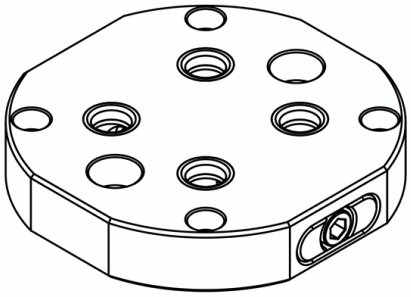

(1) Type 52 positioning interface

SIMPLE - KSG - 96S

Manual zero point positioning

Manual Zero PointPositioning

It is positioned with 4 rivets to maintain the pull-down force for a long time and is locked by a wrench.

Scope of delivery
Clamping module, fastening screws, operable manual, clamping rivets

Technical data

Description	ID	Positioning diameter	Max. torque [N.m]	Repeat accuracy [mm]	Weight [kg]
KSG - 96S	15100	Φ20 (1)	30	0.01	7.1

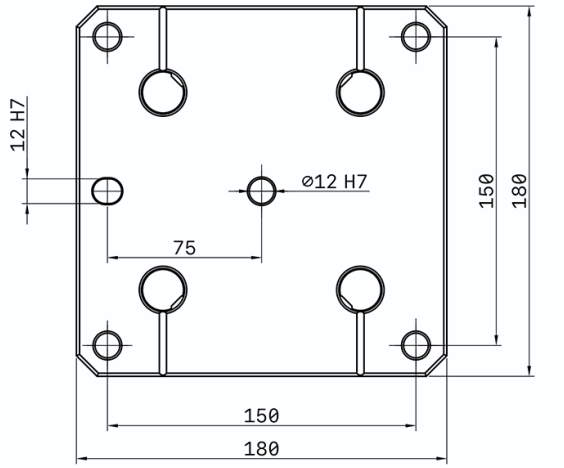

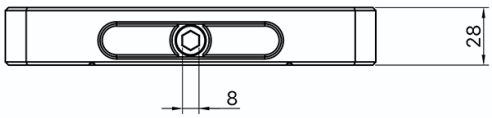

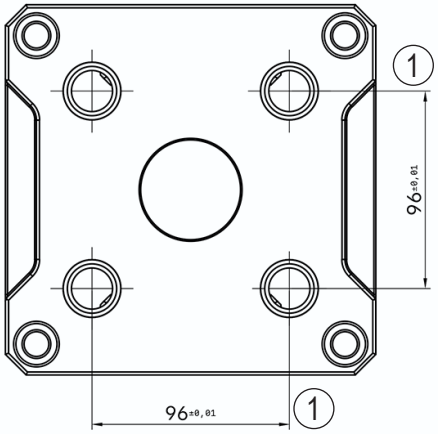

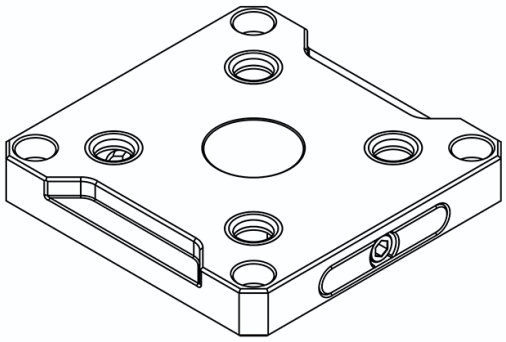

(1) Type 96 positioning interface

SIMPLE-Clamping Pins 52/96

Manual zero point positioning

Technical data

Manual Zero PointPositioning

It is positioned with 4 rivets to maintain the pull-down force for a long time and is locked by a wrench.

Scope of delivery
Clamping module, fastening screws, operable manual, clamping rivets

Description	ID	Positioning diameter	Max. torque [N.m]	Repeat accuracy [mm]	Weight [kg]
KSG -Pro	15200	Φ16 ① Φ20 ②	30	0.01	7.1

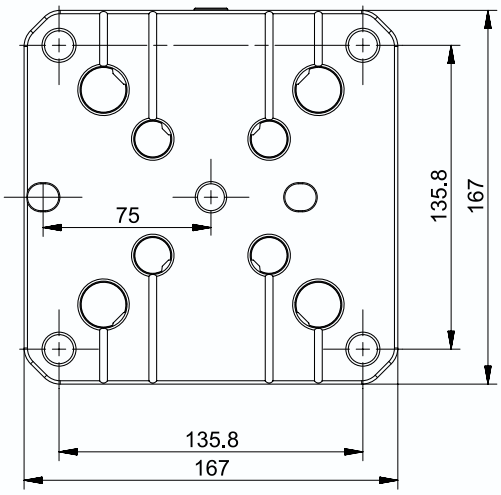

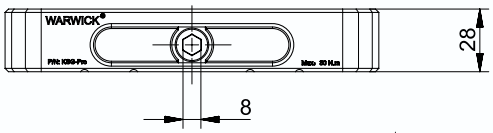

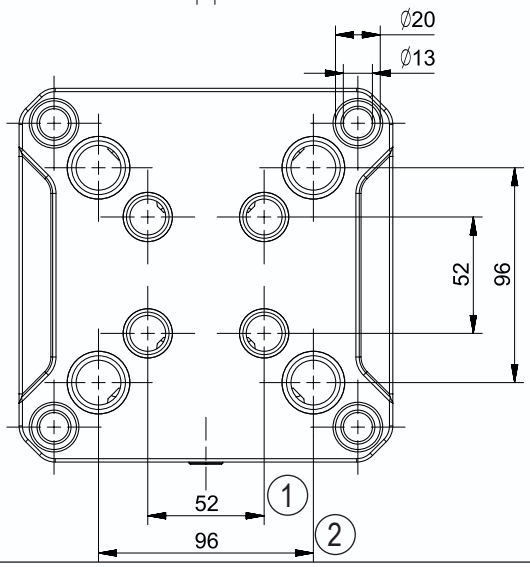

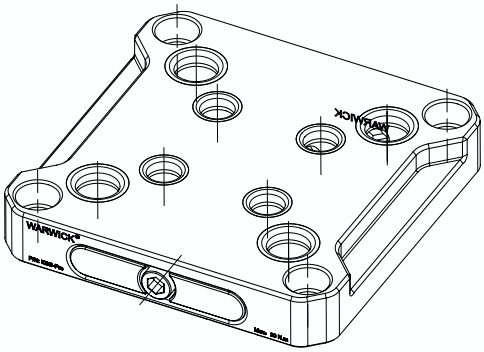

① Type 52 positioning interface

② Type 96 rivet mounting position

Manual Zero PointPositioning

It is positioned with 4 rivets to maintain the pull-down force for a long time and is locked by a wrench.

Scope of delivery
Clamping module, fastening screws, operable manual, clamping rivets

Technical data

Description	ID	Positioning diameter	Max. torque [N.m]	Repeat accuracy [mm]	Weight [kg]
KSG - Pro-L	15202	Φ20 ①	30	0.01	24.5

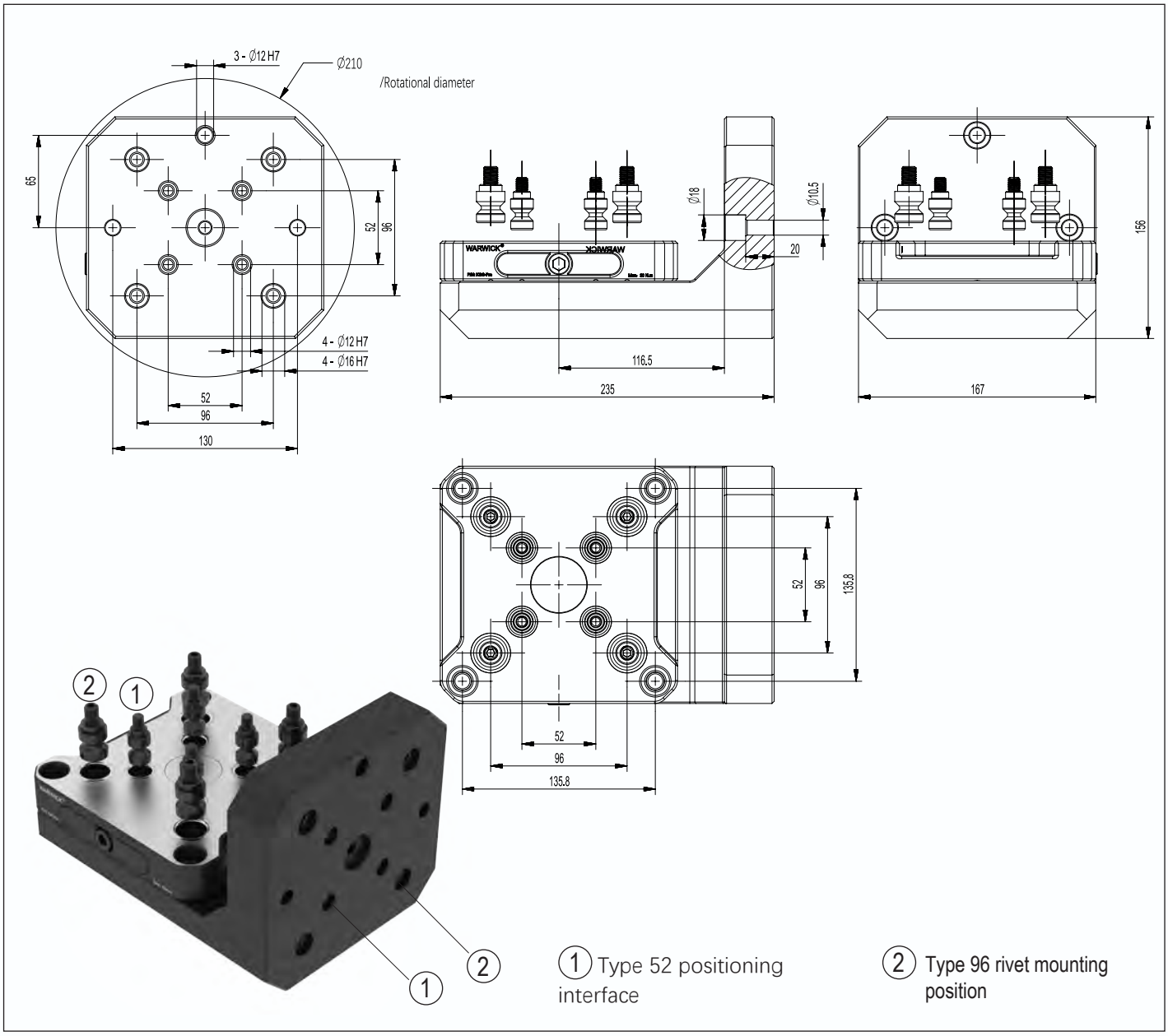

Clamping Pins

Scope of delivery
Clamping pins including fastening screws

Description	ID	Material	Holding force M8 [kN]	Holding force M10 [kN]	Holding force M12 [kN]	Version	Weight [kg]
52S- 16	15500	steel	20			Positioning pin	0.1
96S - 20	15502	steel		35		Positioning pin	0.15

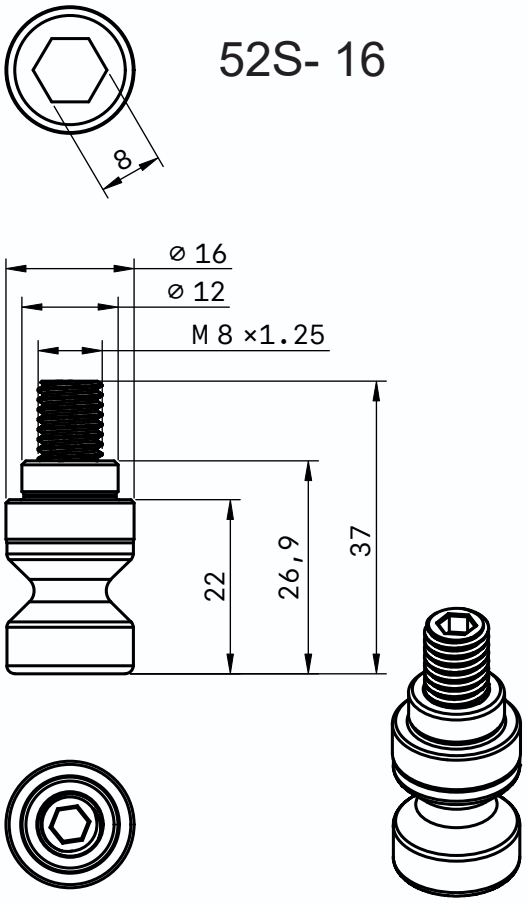

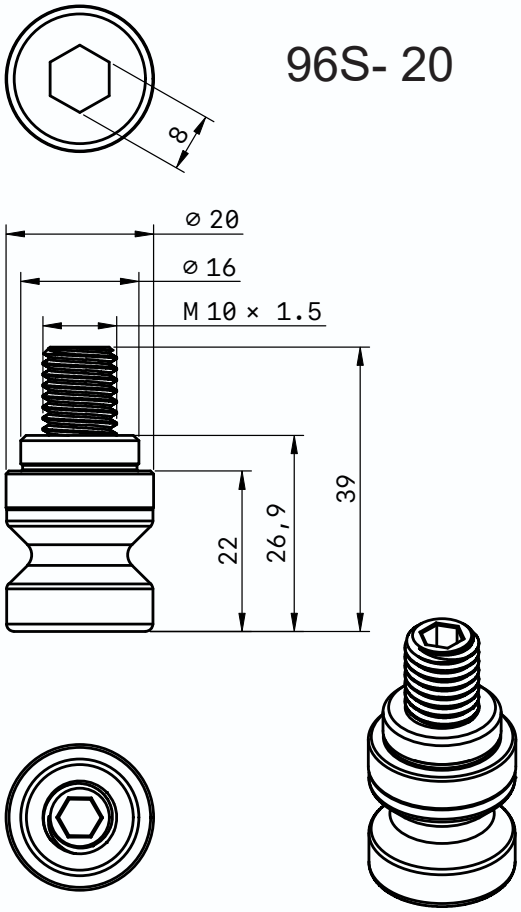

RELIABLE - KSP

Pneumatic centering vice

RELIABLE

Ultra-high clamping accuracy ≤ 0.02mm
50% Clamping force is maintained even

The vice adopts a special drive mechanism, so the clamped workpiece will not loat.

The jaws are modular in design, and adopt WARWICK special interface, which can install hard jaws and soft jaws. Unleash the full potential of your vise.

In order to protect the safety of the operator, we limit the travel of the vise to less than 10mm.

Advantages – Your benefits

Precision wedge hook clamping force block for
top-quality demands
Allows excellent machining processes

Low height
Maximum use of the machine room and maximum rigidity of the system

Cubic design
Ideal for 6-sided machining with 2 set-ups on 4-axis machines

High degree of efficiency of the wedge hook system Safe clamping due to high clamping forces

High degree of efficiency of the wedge hook system Safe clamping due to high clamping forces

Base jaws with tongue and groove or fine serration as standard
High flexibility in the range of top jaws

Optimal jaw support due to the use of a very long base jaw guidance
Allows high clamping forces at a long service life

All sides of the functional parts are ground and hardened
Ensures a long service life

Definition clamping force
The clamping force is the arithmetic sum of the various forces on the chuck jaws under the maximum pressure and maximum torque.

Definition repeatability
The repeat accuracy is the result from the end position spreads after 100 consecutive strokes.

Definition repeatability
of the jaw change
The repeatability of the jaw change only obtain in clamping direction.

RELIABLE-KSP
Technology

The power is transferred from the axially adjustable pneumatic cylinder to the slightly longer base jaws with the help of the diagonal pull at the wedge hook.

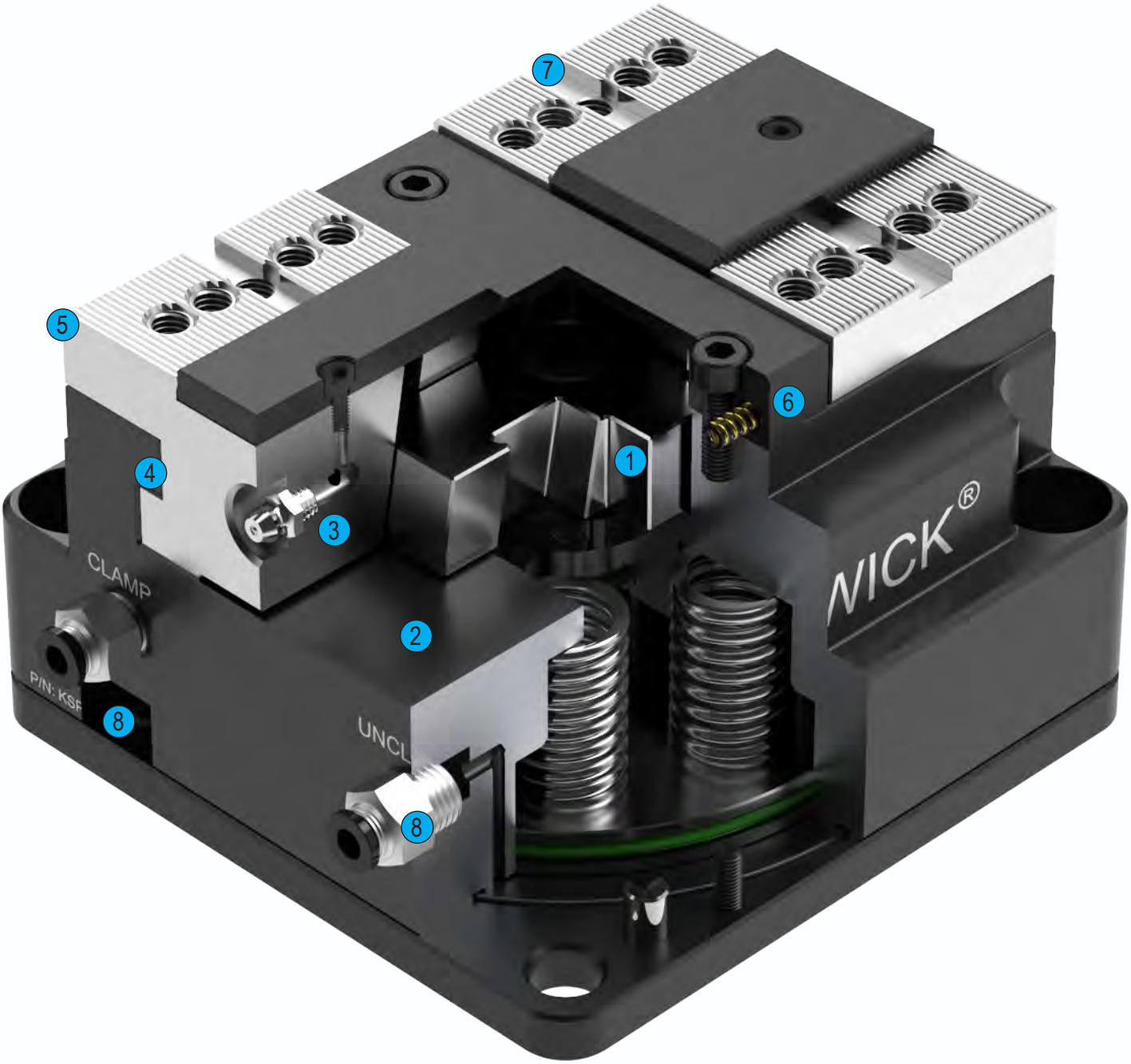

SIMPLE=RELIABLE

1 Wedge hook drive

2 Hardened and extremely rigid base body
Therefore a longer life span at highest precision. Even with maximum clamping force

3 Optimized lubrication system

4 Long jaw guidance

5 Low height
Increases the workspace of your machine

6 Improved design which is insensitive to dirt

7 Standard chuck jaw interface
For using standard WARWCIK top jaws

8 The way of gas supply
From the side or bottom as needed

RELIABLE - KSP - 75

Pneumatic centering vice

Pneumatic vise

The total stroke is 5mm, the center clamping accuracy is less than 0.02mm, and it has the function of holding pressure.

Scope of supply
Mounting screws, air hose fittings and operator's manual for a pneumatic self-centering vise and upper jaw, excluding upper jaw.

Description	ID	Stroke/jaw [mm]	6 barClamping force* [N]	Max. pressure [bar]	Repeat accuracy vise* [mm]	Max. jaw height [mm]	Air consumption per double stroke at 7 bar [m³]	Closing/ opening time [s]	Weight [kg]
KSP-75	20100	2.5	9000	9	0.02	60	10.4E-9 m³/s	0.5	8

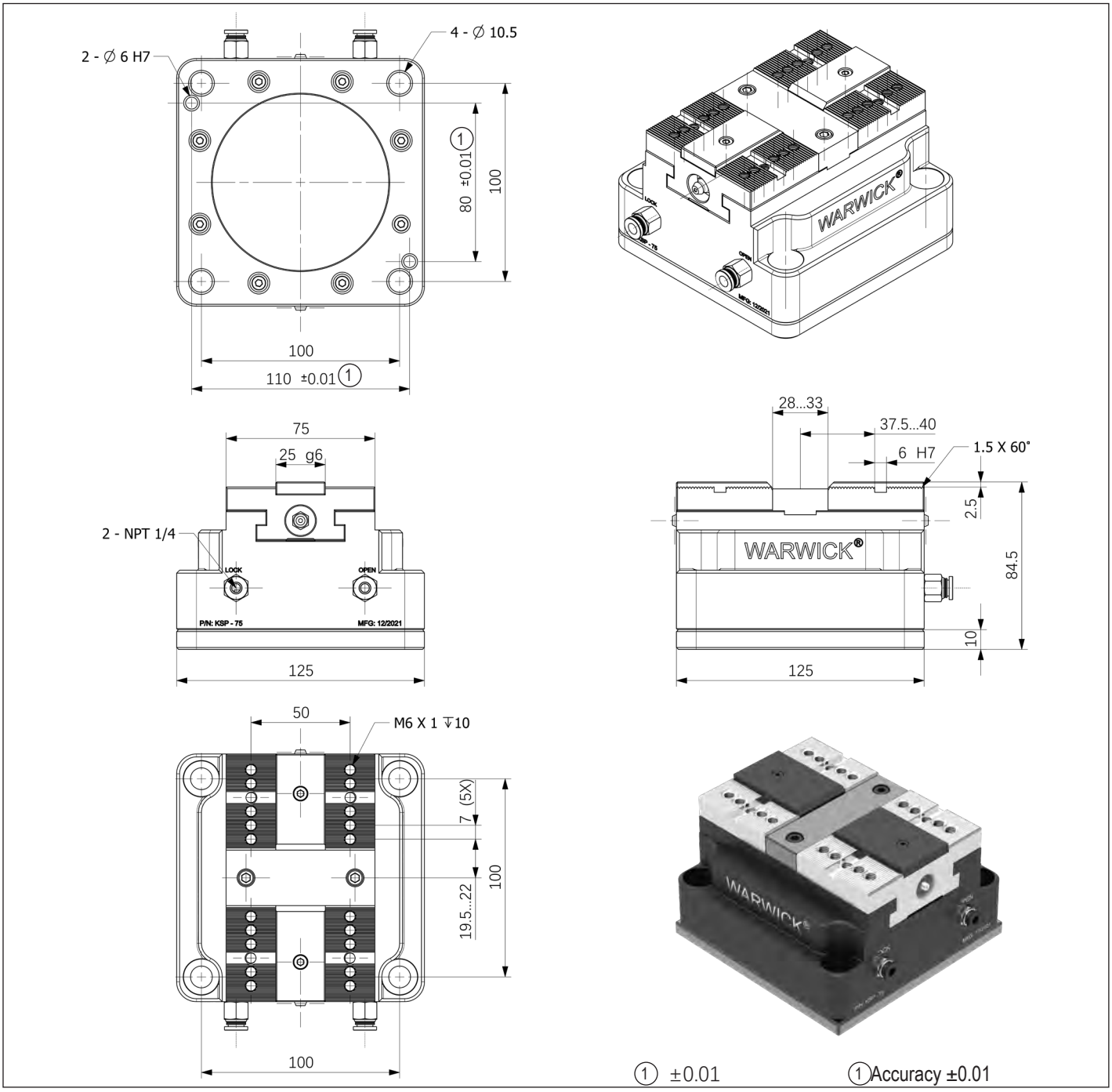

Pneumatic vise

The total stroke is 5mm, the center clamping accuracy is less than 0.02mm, and it has the function of holding pressure.

Scope of supply
Mounting screws, air hose fittings and operator's manual for a pneumatic self-centering vise and upper jaw, excluding upper jaw.

Description	ID	Stroke/jaw [mm]	6 barClamping force* [N]	Max. pressure [bar]	Repeat accuracy vise* [mm]	Max. jaw height [mm]	Air consumption per double stroke at 7 bar [m³]	Closing/ opening time [s]	Weight [kg]
KSP-100	20110	2.5	15000	9	0.02	60	14.4E-9 m³/s	0.5	11

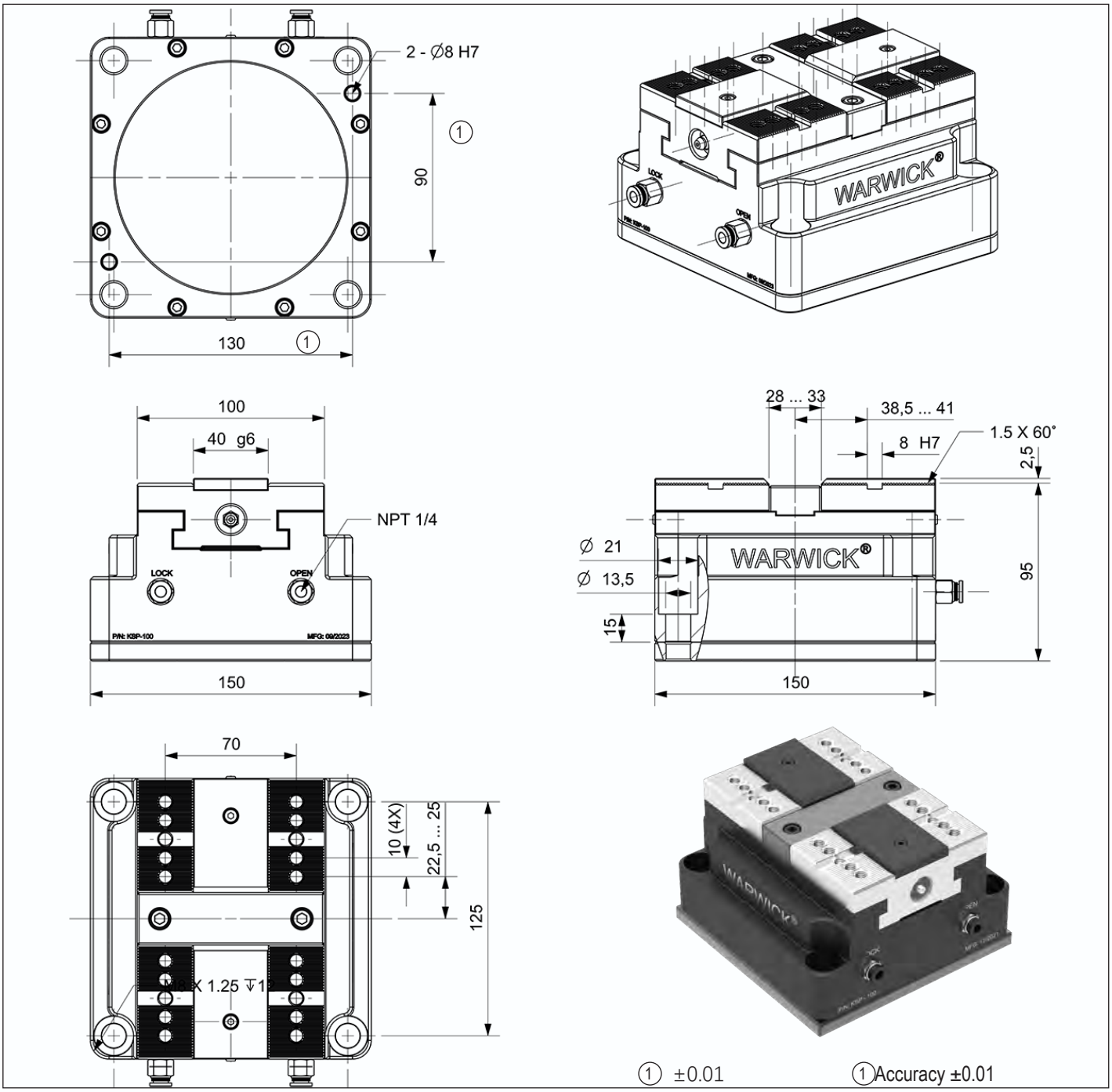

RELIABLE - KSP - 150

Pneumatic centering vice

Pneumatic vise

The total stroke is 10mm, the center clamping accuracy is less than 0.02mm, and it has the function of holding pressure.

Scope of supply
Mounting screws, air hose fittings and operator's manual for a pneumatic self-centering vise and upper jaw, excluding upper jaw.

Description	ID	Stroke/jaw [mm]	6 barClamping force* [N]	Max. pressure [bar]	Repeat accuracy vise* [mm]	Max. jaw height [mm]	Air consumption per double stroke at 7 bar [m³]	Closing/opening time [s]	Weight [kg]
KSP-150	20130	5	22000	9	0.03	100	20.4E-9 m³/s	0.5	28

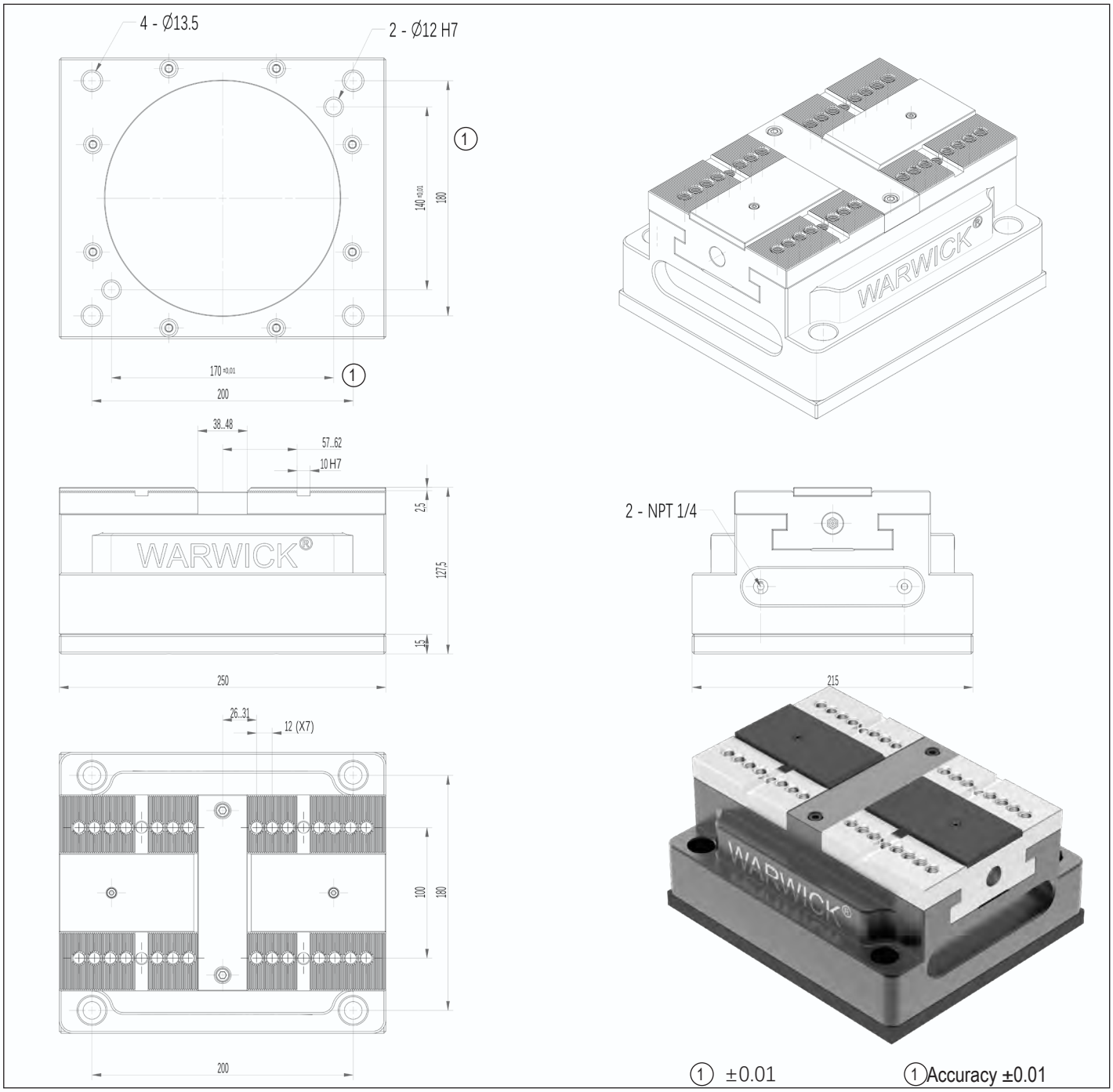

RELIABLE - KSP2 - 75

Pneumatic centering vice

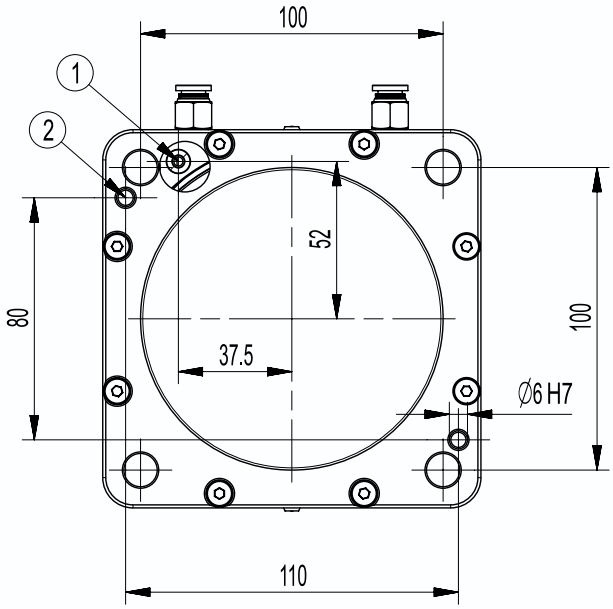

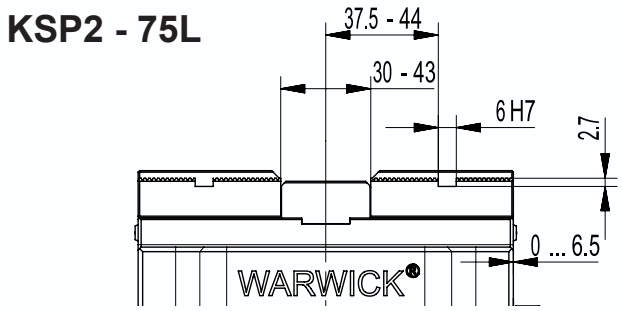

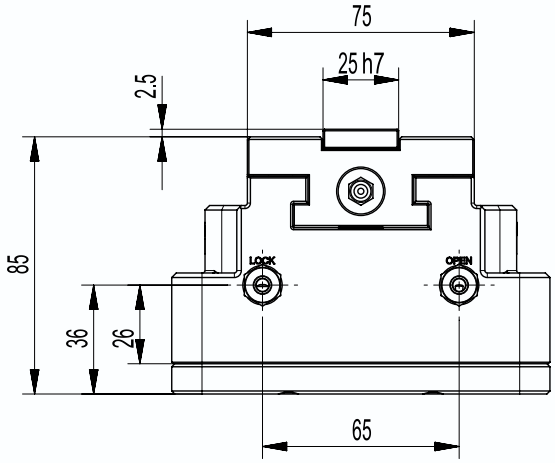

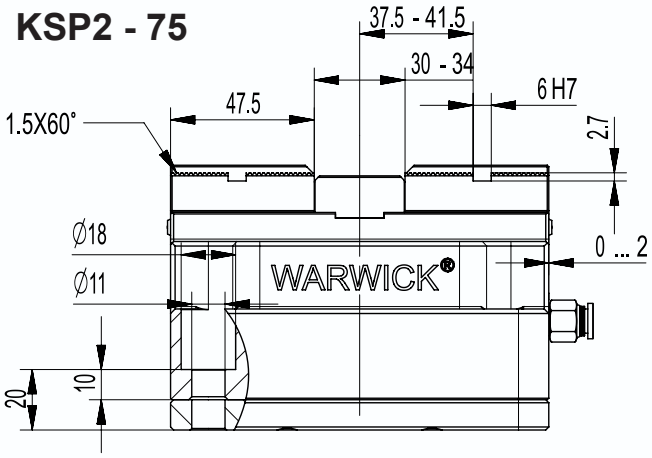

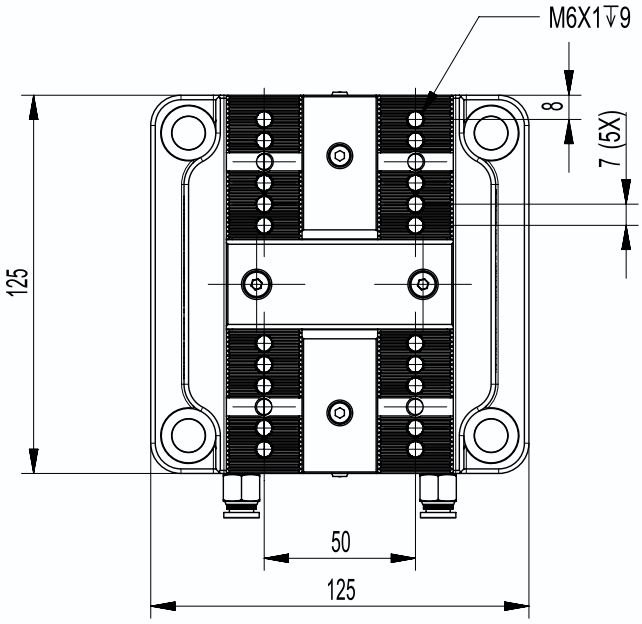

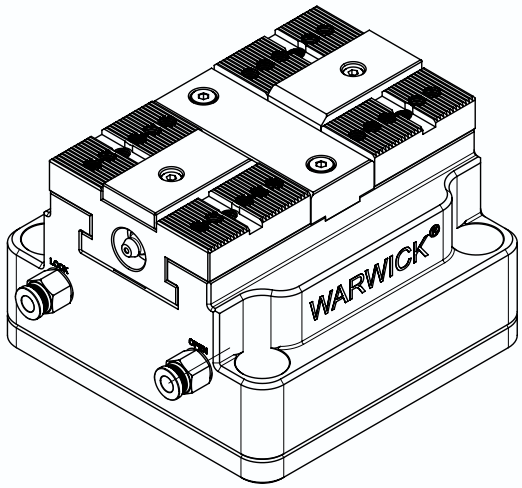

① Increase the clamping force air intake
② Locating pin holes

Technical data

Description	ID	Stroke per jaw [mm]	Max. jaw height [mm]	Repeat accuracy [mm]	Closing/ opening time [S]	Clamping force at 0.68 bar [kN]	Additional clamping force resulting from spring assembly [kN]	Operating pressure [bar]	Air consumption per double stroke at 6 bar [cm³]	Weight [kg]
KSP2 - 75	20101	2	50	0.01	0.6	12.5	5	4 - 9	1224	9
KSP2 - 75L	20102	6.5	100	0.01	0.6	7	3	4 - 9	1224	9

- See pages B3 and B4 for detailed descriptions of the above device versions.
- From page B, match the system and top jaws.

Scope of delivery

Pneumatic self-centering vise, jaw mounting screws, jaw mounting wrench, electronic version of the operating manual

Combined maximum clamping force

The clamping force is measured at the maximum opening at a maximum pressure of 6.8 bar and the displayed value is measured using a sensor.

The clamping force of the spring assembly

The increase in clamping force caused by the spring assembly depends on the stroke due to the spring tension. The maximum spring force is reached in the "on" state and the minimum spring force in the "off" state.

RELIABLE - KSP2 - 100

Pneumatic centering vice

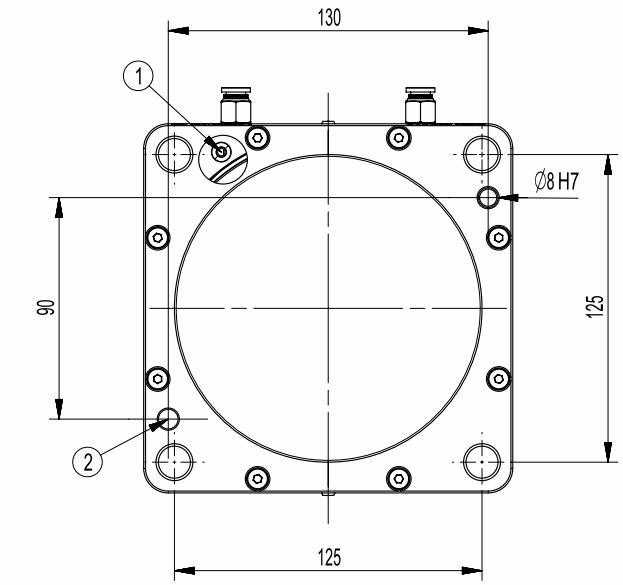

KSP2 - 100L

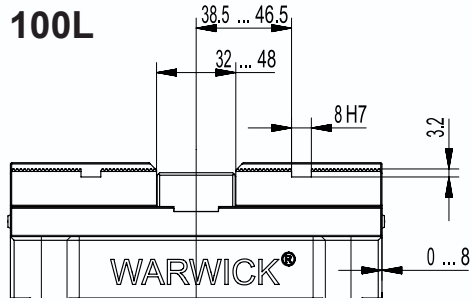

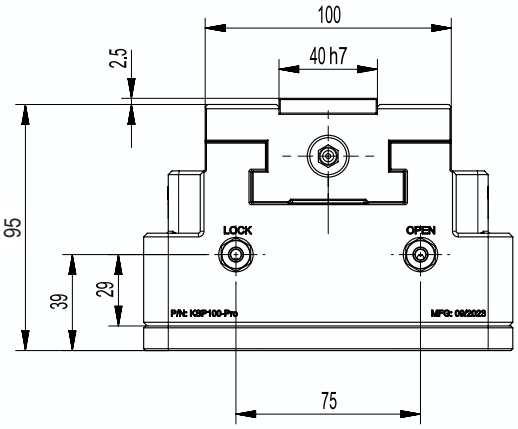

KSP2 - 100

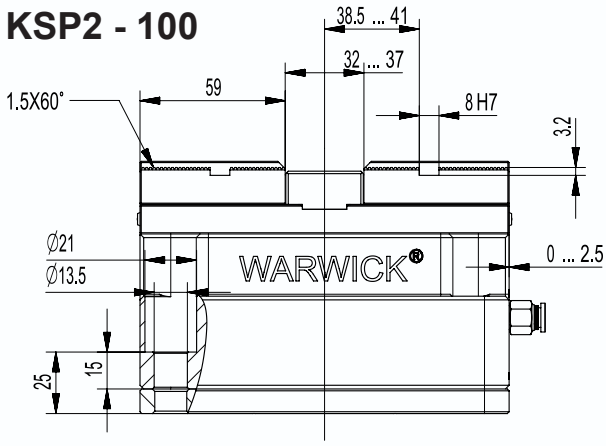

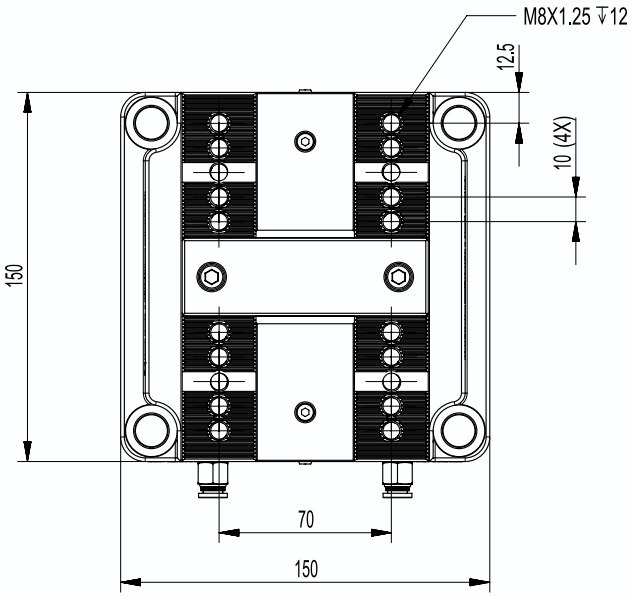

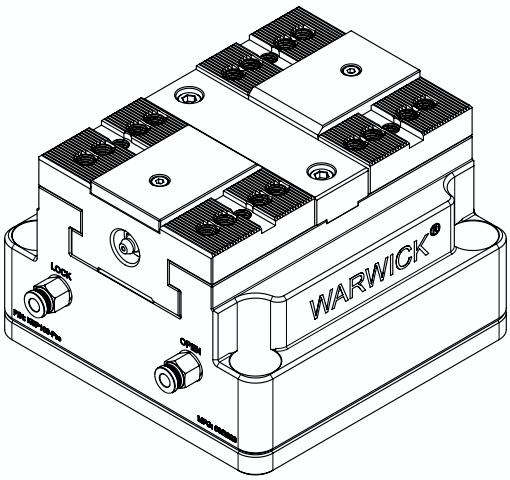

① Increase the clamping force air intake
② Locating pin holes

Technical data

Description	ID	Stroke per jaw [mm]	Max. jaw height [mm]	Repeat accuracy [mm]	Closing/ opening time [S]	Clamping force at 0.68 bar [kN]	Additional clamping force resulting from spring assembly [kN]	Operating pressure [bar]	Air consumption per double stroke at 6 bar [cm³]	Weight [kg]
KSP2 - 100	20111	2.5	60	0.01	0.6	20	6	4 - 9	2160	13
KSP2 - 100L	20112	8	120	0.01	0.6	10	4	4 - 9	2160	13

- See pages B3 and B4 for detailed descriptions of the above device versions.
- From page B, match the system and top jaws.

Scope of delivery

Pneumatic self-centering vise, jaw mounting screws, jaw mounting wrench, electronic version of the operating manual

Combined maximum clamping force

The clamping force is measured at the maximum opening at a maximum pressure of 6.8 bar and the displayed value is measured using a sensor.

The clamping force of the spring assembly

The increase in clamping force caused by the spring assembly depends on the stroke due to the spring tension. The maximum spring force is reached in the "on" state and the minimum spring force in the "off" state.

RELIABLE - KSP2 - 125

Pneumatic centering vice

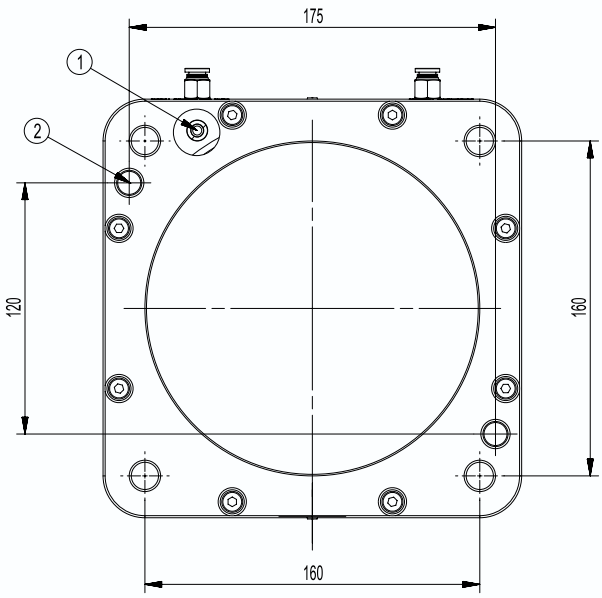

KSP2 - 125L

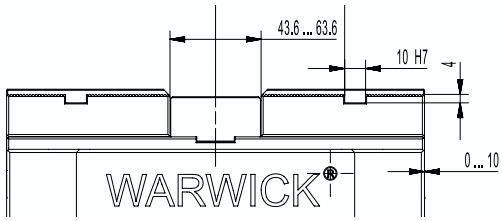

KSP2 - 125

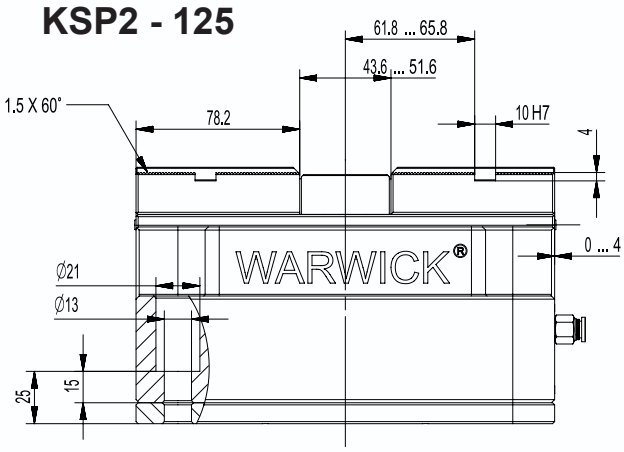

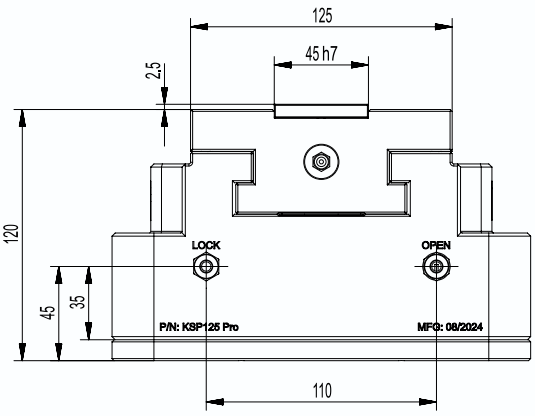

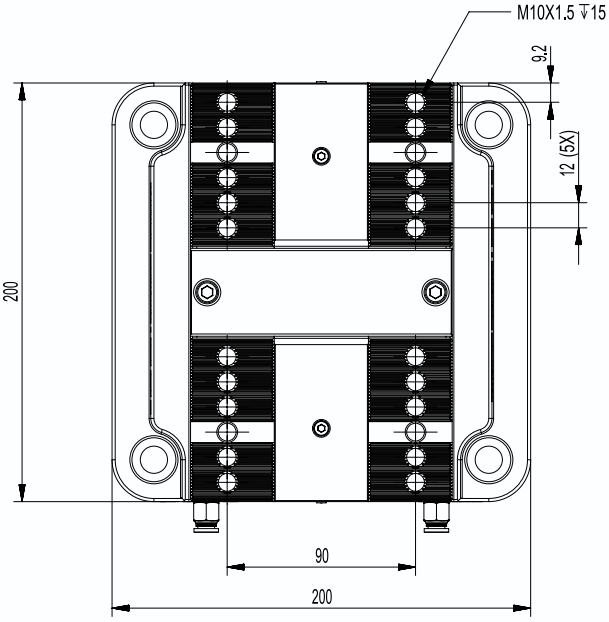

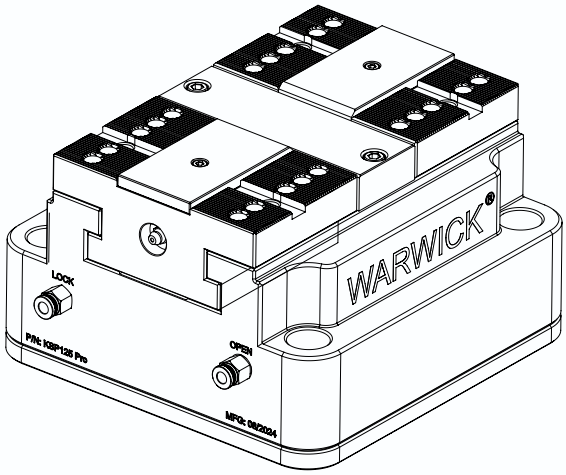

① Increase the clamping force air intake
② Locating pin holes

Technical data

Description	ID	Stroke per jaw [mm]	Max. jaw height [mm]	Repeat accuracy [mm]	Closing/ opening time [S]	Clamping force at 0.68 bar [kN]	Additional clamping force resulting from spring assembly [kN]	Operating pressure [bar]	Air consumption per double stroke at 6 bar [cm³]	Weight [kg]
KSP2 - 125	20121	4	60	0.02	0.6	27	5	4 - 9	5520	26
KSP2 - 125L	20122	10	120	0.02	0.6	12	3	4 - 9	5520	26

- See pages B3 and B4 for detailed descriptions of the above device versions.
- From page B, match the system and top jaws.

Scope of delivery

Pneumatic self-centering vise, jaw mounting screws, jaw mounting wrench, electronic version of the operating manual

Combined maximum clamping force

The clamping force is measured at the maximum opening at a maximum pressure of 6.8 bar and the displayed value is measured using a sensor.

The clamping force of the spring assembly

The increase in clamping force caused by the spring assembly depends on the stroke due to the spring tension. The maximum spring force is reached in the "on" state and the minimum spring force in the "off" state.

RELIABLE - KSP2 - 150

Pneumatic centering vice

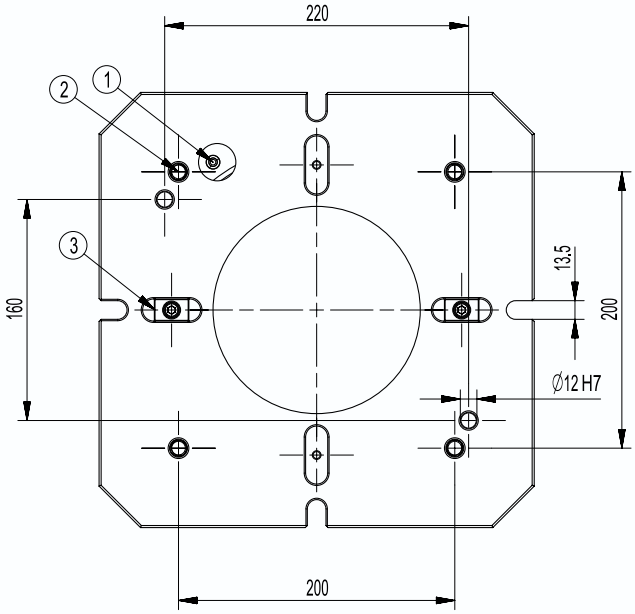

KSP2 - 150L

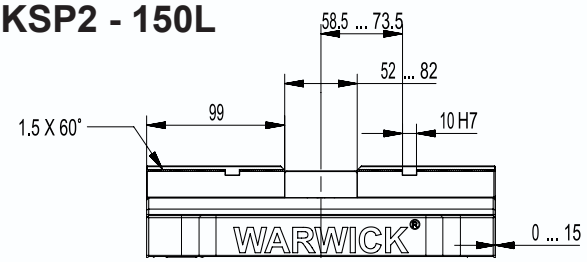

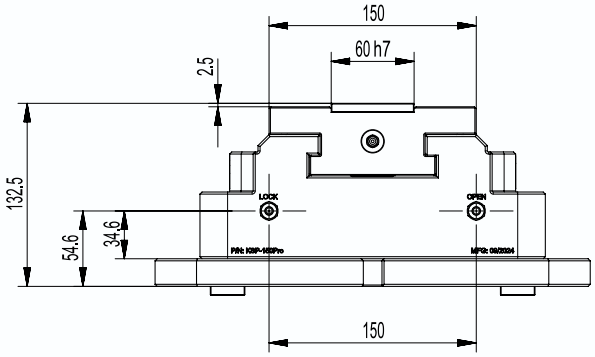

KSP2 - 150

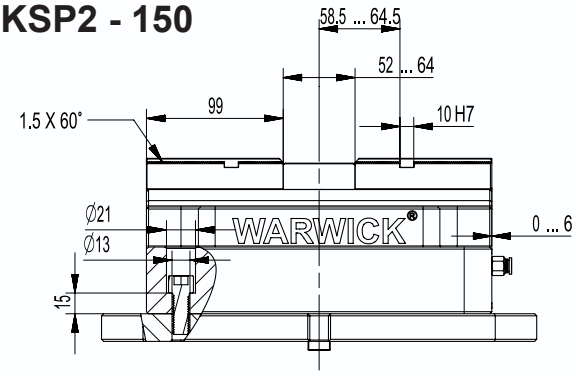

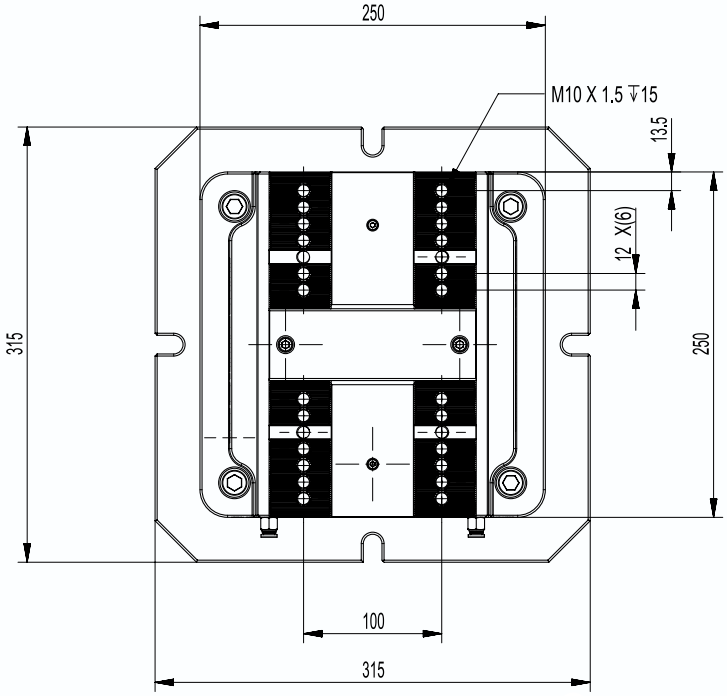

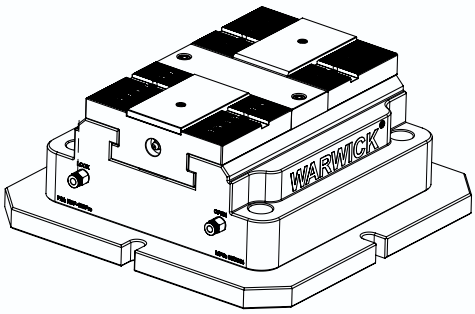

① Increase the clamping force air intake
② Locating pin holes

Technical data

Description	ID	Stroke per jaw [mm]	Max. jaw height [mm]	Repeat accuracy [mm]	Closing/ opening time [S]	Clamping force at 0.68 bar [kN]	Additional clamping force resulting from spring assembly [kN]	Operating pressure [bar]	Air consumption per double stroke at 6 bar [cm³]	Weight [kg]
KSP2 - 150	20131	4	60	0.02	0.6	30	5	4 - 9	5520	36
KSP2 - 150L	20132	10	120	0.02	0.6	16	3	4 - 9	5520	36

- See pages B3 and B4 for detailed descriptions of the above device versions.
- From page B, match the system and top jaws.

Scope of delivery

Pneumatic self-centering vise, jaw mounting screws, jaw mounting wrench, electronic version of the operating manual

Combined maximum clamping force

The clamping force is measured at the maximum opening at a maximum pressure of 6.8 bar and the displayed value is measured using a sensor.

The clamping force of the spring assembly

The increase in clamping force caused by the spring assembly depends on the stroke due to the spring tension. The maximum spring force is reached in the "on" state and the minimum spring force in the "off" state.

Top Jaw Blanks RZ

Material: S45C, hardenable | Aluminum 6061 Version: Fastening bores for screw DIN EN ISO 4762 Mounting: Via tongue and groove

Description	ID	Suitable for	A [mm]	B [mm]	C [mm]	D [mm]	B1 [mm]	B2 [mm]	T1 [mm]	T2 [mm]	Clamping range [mm]	Weight [kg]
TRZ-75A Aluminum 6061	20215	KSP-75	62.5	75	40	25	25	42.5	25	33	0-125	1.1
TRZ-75S Steel S45C	20216											2.7
TRZ-100A Aluminum 6061	20225	KSP-100	75	100	50	40	22	55	40	30	0-150	2.1
TRZ-100S Steel S45C	20226											5.5
TRZ-125A Aluminum 6061	20230	KSP-125	100	125	60	45	30	80	49	35	0-200	6
TRZ-125S Steel S45C	20231											12
TRZ-150A Aluminum 6061	20235	KSP-150	125	150	70	60	40	85	55	45	0-250	7.1
TRZ-150S Steel S45C	20236											19.9

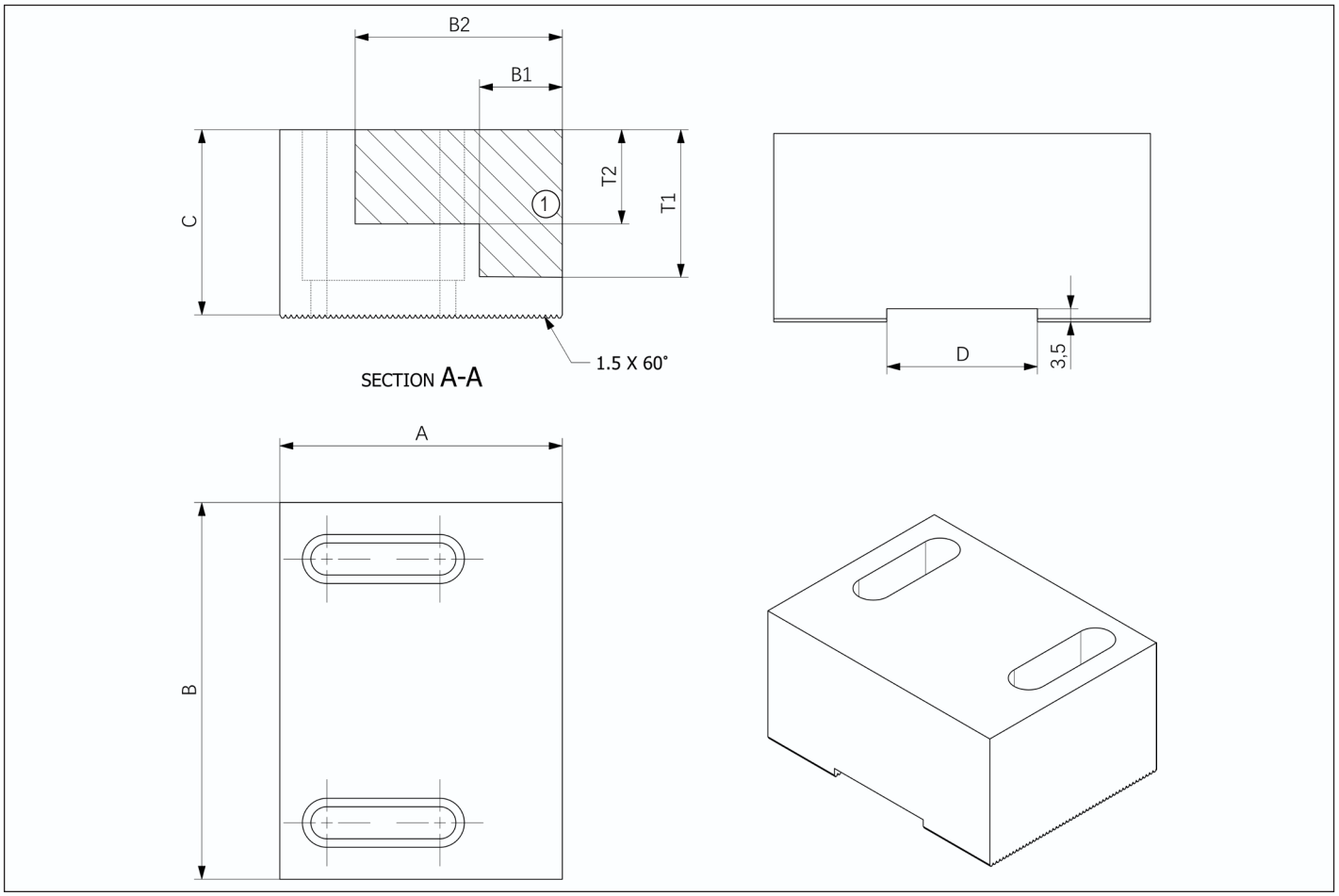

1 Work surface

Top Jaw Blanks RZ

Material: S45C, hardenable | Aluminum 6061
Version: Fastening bores for screw DIN EN ISO 4762
Mounting: Via tongue and groove

Description	ID	Suitable for	A [mm]	B [mm]	C [mm]	D [mm]	B1 [mm]	B2 [mm]	C1 [mm]	C2 [mm]	D1 [mm]	D2 [mm]	E1 [mm]	E2 [mm]
YZL-75	20315	KSP-75	75	65.5	40	27	50	12	15	34.5	7	20	M8	M6
YZL-100A	20325	KSP-100	100	88	53	35	63	15	21.5	48.5	8	27	M8	M8
YZL-100B	20326						100							
YZL-125-M8	20330	KSP-125	125	109	62	40	80	20	20	64	10	35	M8	M8
YZL-125-M10	20331						90						M10	
YZL-150-M8	20335	KSP-150	150	133	62	40	100	15	28	75	10	30	M8	M8
YZL-150-M10	20336												M10	

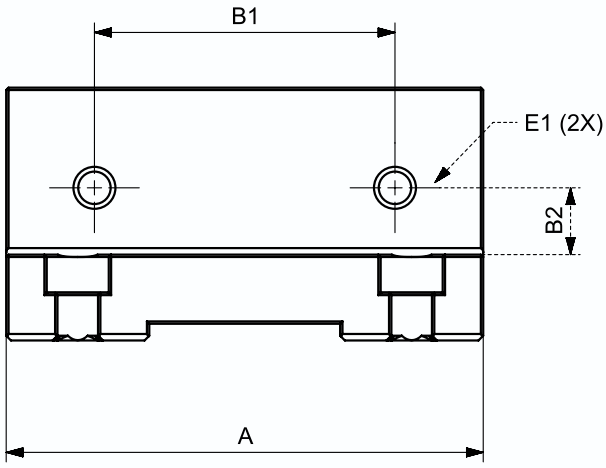

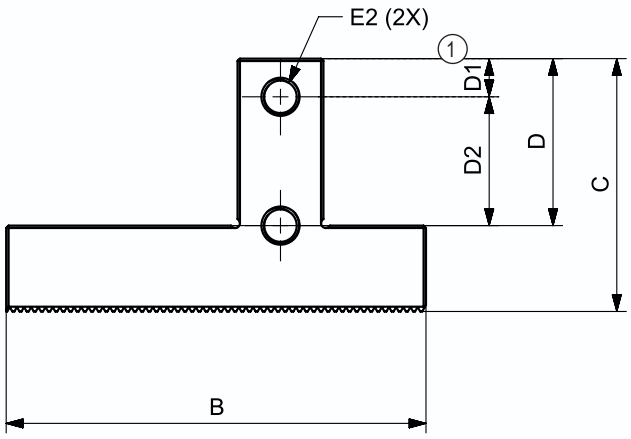

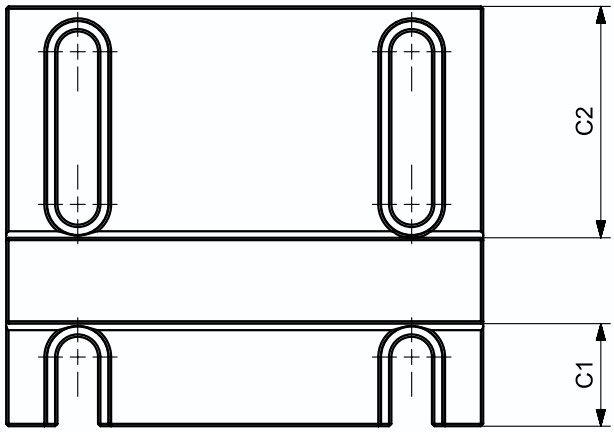

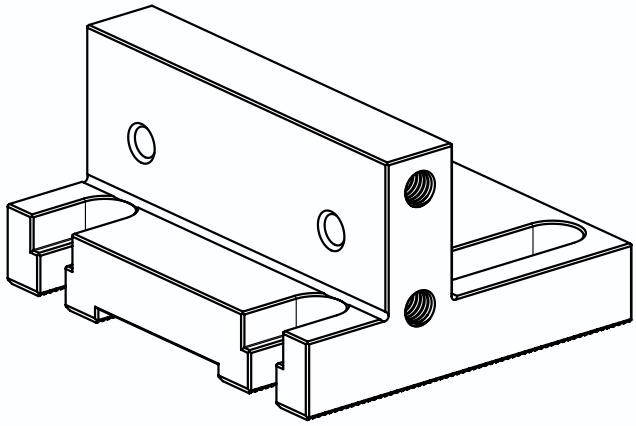

1 For fastening an end-stop

Top Jaw Blanks RZ

Material: S45C, hardenable | Aluminum 6061 Version: Fastening bores for screw DIN EN ISO 4762 Mounting: Via tongue and groove

Description	ID	Suitable for	A [mm]	B [mm]	C [mm]	D [mm]	B1 [mm]	B2 [mm]	T1 [mm]	T2 [mm]	Clamping range [mm]	Weight [kg]
RZ-75A Aluminum 6061	20210	KSP-75	62.5	75	40	19	25	42.5	25	33	0-120	1.1
RZ-75S Steel S45C	20211											2.7
RZ-100A Aluminum 6061	20220	KSP-100	75	100	50	28.5	22	55	40	30	0-130	2.1
RZ-100S Steel S45C	20221											5.5
RZ-125A Aluminum 6061	20225	KSP-125	100	125	60	28.2	45	80	49	35	0-160	5.5
RZ-125S Steel S45C	20226											13
RZ-150A Aluminum 6061	20230	KSP-150	125	150	70	58	40	85	55	45	0-170	7.1
RZ-150S Steel S45C	20231											19.9

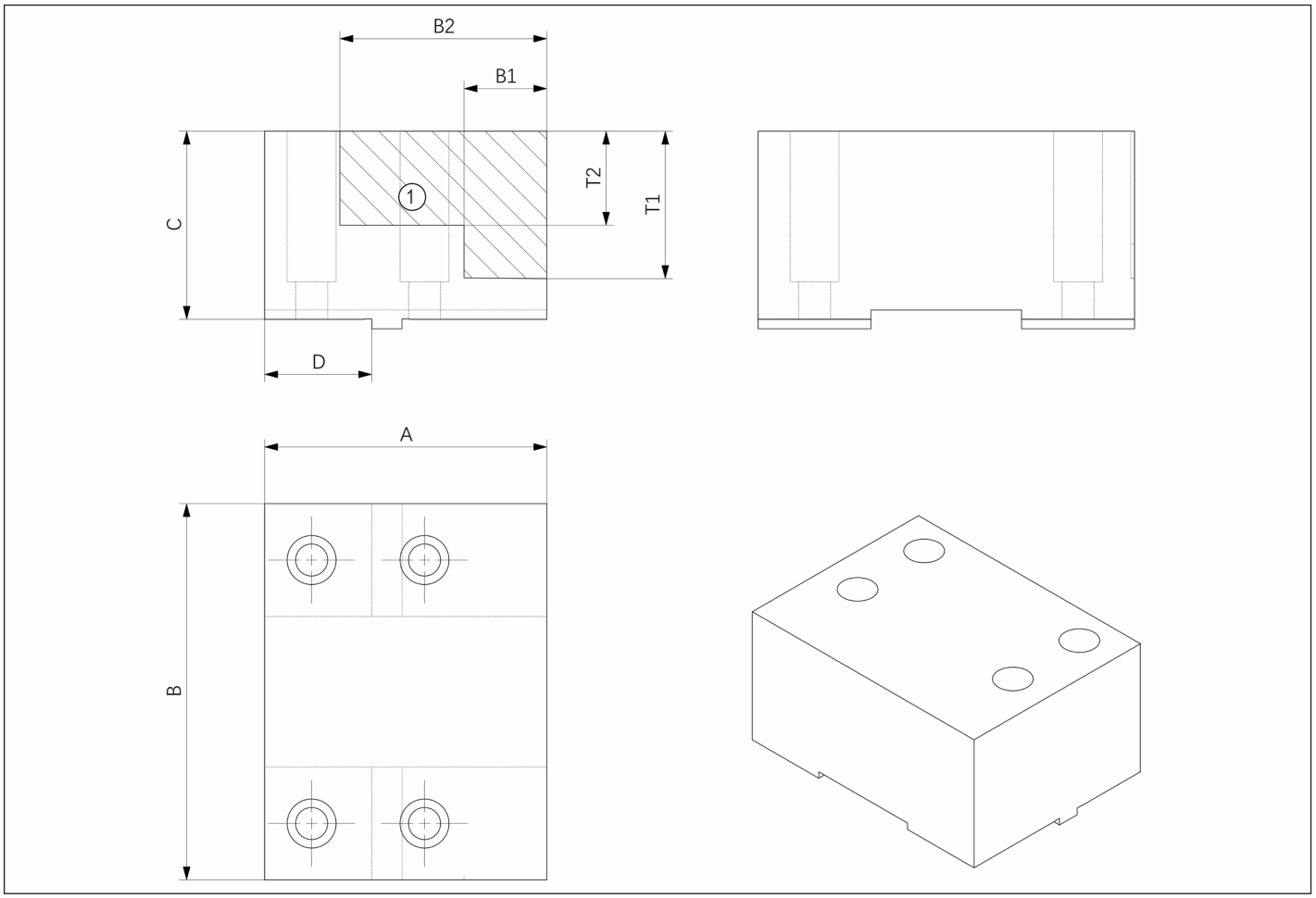

1 Work surface

L-shaped hard claws

Material: 42CrMo, Hardened
Version: Bored and countersunk for screw M6/M8/M10
Mounting: V

Description	ID	Suitable for	A [mm]	B [mm]	C [mm]	D [mm]	B1 [mm]	B2 [mm]	C1 [mm]	C2 [mm]	D1 [mm]	D2 [mm]	D3 [mm]	Weight [kg]
YZ-75	20310	KSP-75	60	75	20.5	13	2.5	3	27.5	50	M6	9.5	7	1.2
YZ-100	20320	KSP-100	62.5	100	27	19	2.5	3	32	70	M6	8.5	8	2.1
YZ-125	20325	KSP-125	81	125	30	22	2.5	4	40	90	M8	15	11.5	3.7
YZ-150	20330	KSP-150	100	150	34.5	22	2.5	5	48	100	M10	12.5	10	5.8

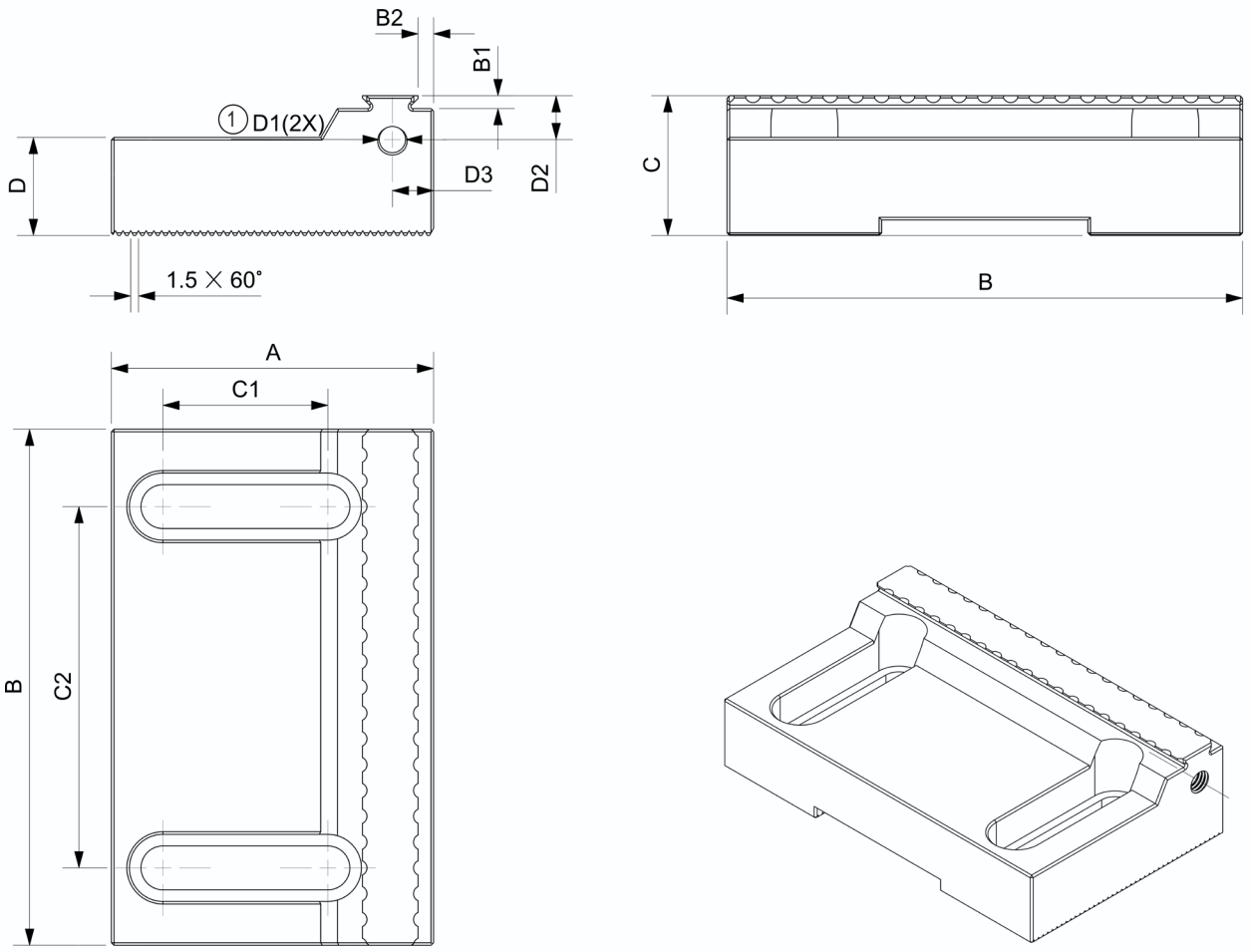

①For fastening an end-stop

Flange FL

Material: S45C, hardenable
Version: Fastening bores for screw DIN EN ISO 4762
Mounting: Via tongue and groove

Description	ID	Suitable for	Weight [kg]
FL-75	20500	KSP-75 / KSP2-75	4.8

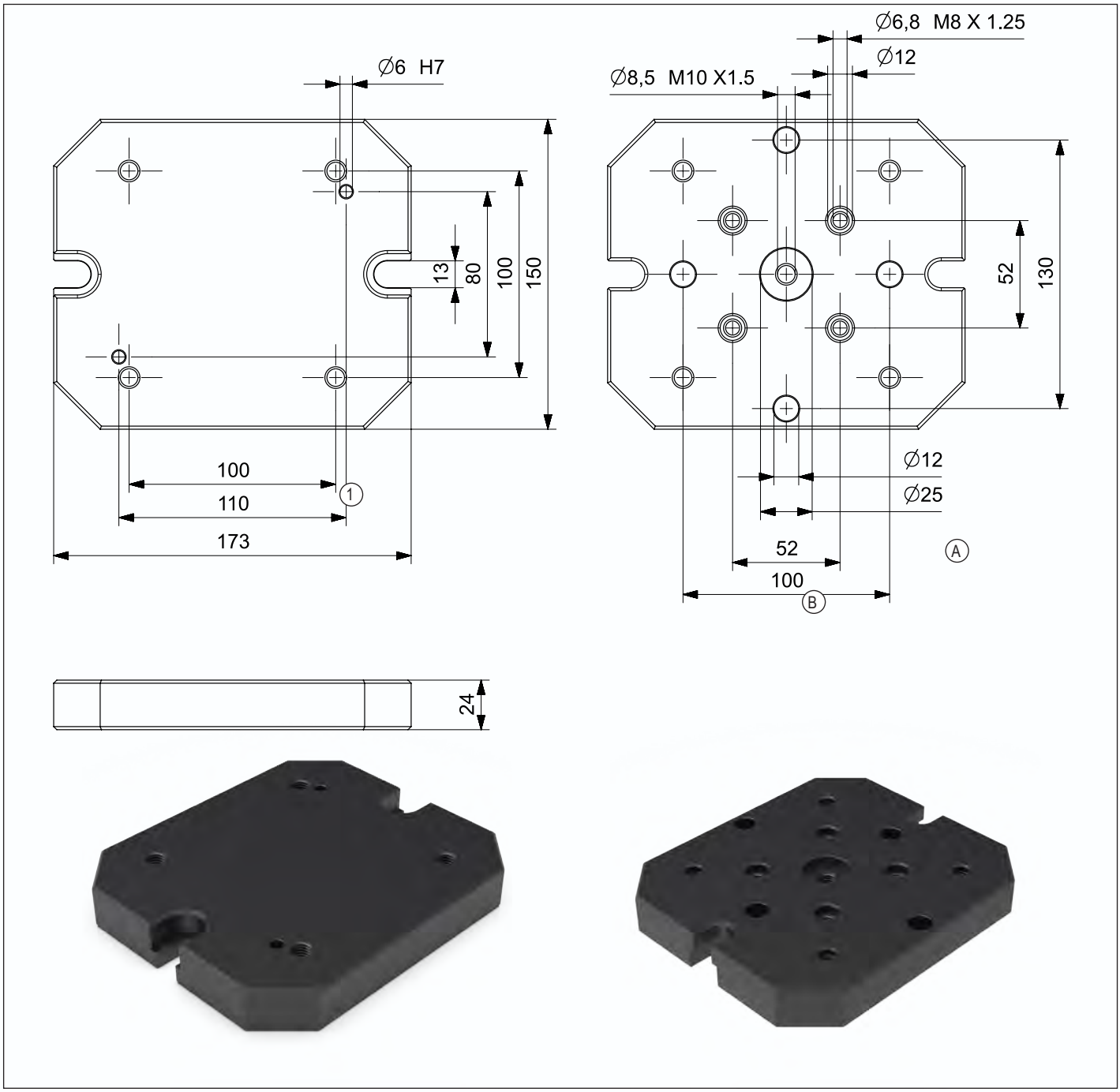

Flange FL

Material: S45C, hardenable
Version: Fastening bores for screw DIN EN ISO 4762
Mounting: Via tongue and groove

Description	ID	Suitable for	Weight [kg]
FL-100	20502	KSP-100 / KSP2-100	5.8

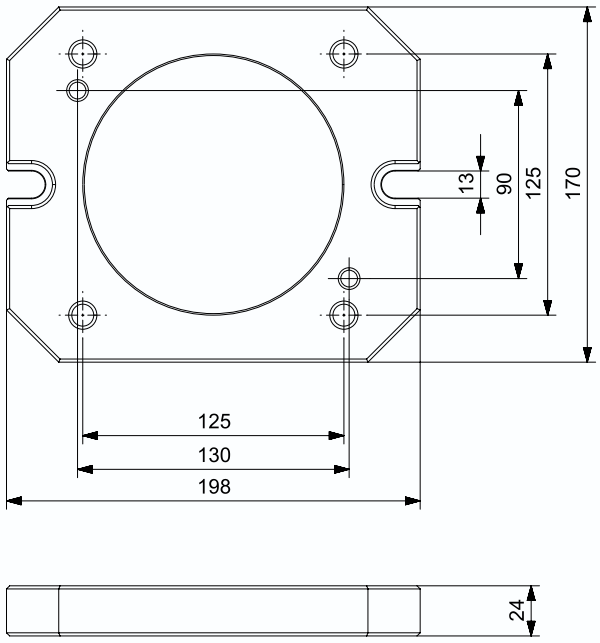

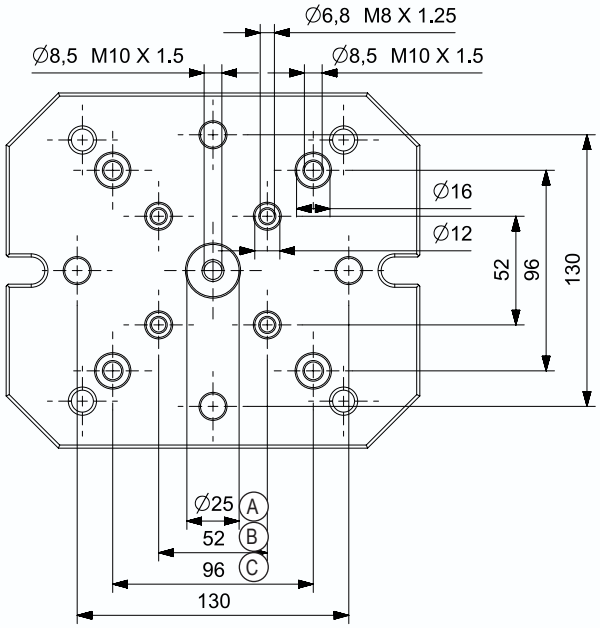

Flange FL

Material: S45C, hardenable
Version: Fastening bores for screw DIN EN ISO 4762
Mounting: Via tongue and groove

Description	ID	Suitable for	Weight [kg]
FL-125	20504	KSP2-125	9.8

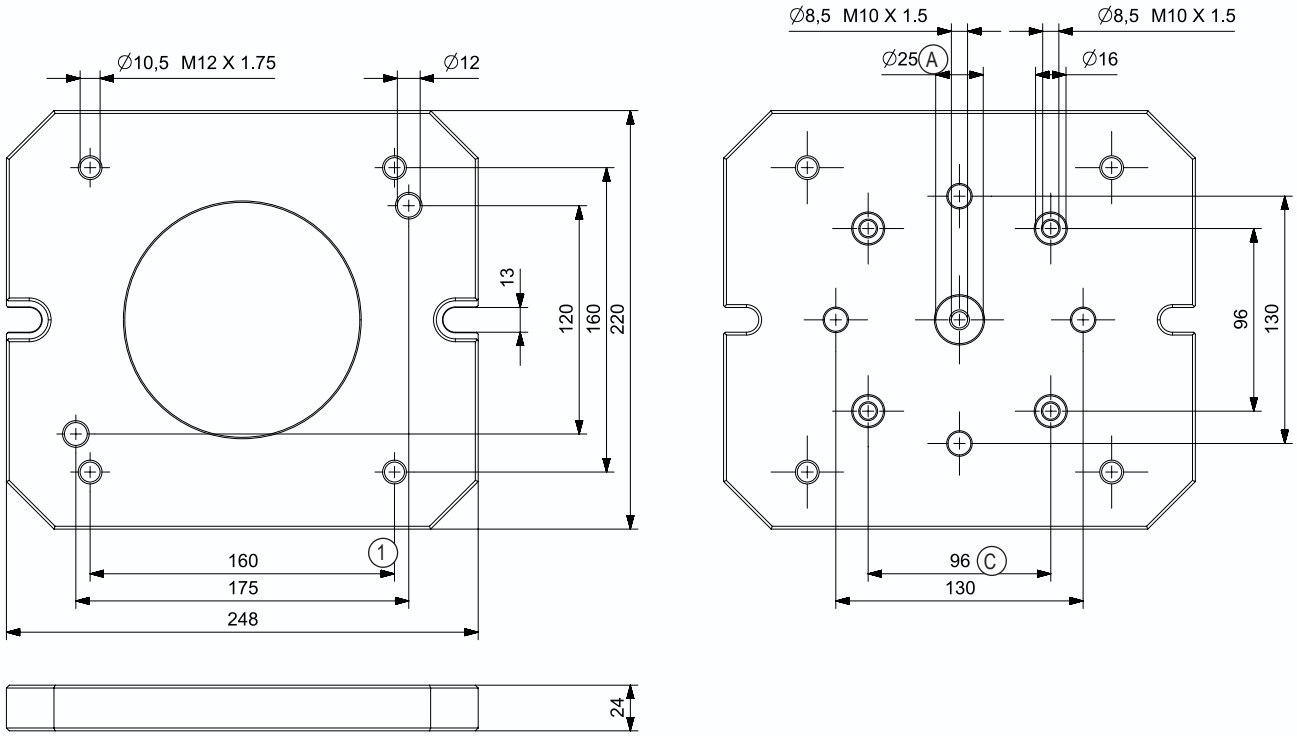

Round flange

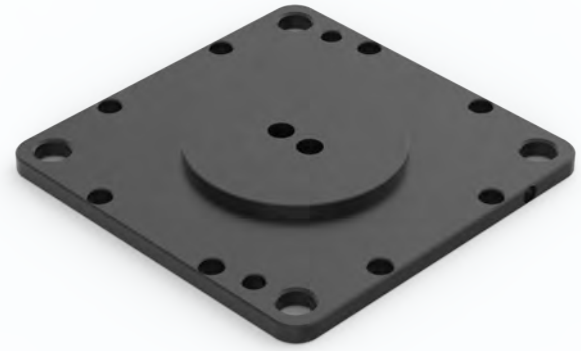

Bottom center air intake flange

RELIABLE

Maximum precision and process reliability

WARWICK manual self-centering vises are designed with a low height to ensure high clamping accuracy and stable clamping force.
The pre-tensioned and backlash-free center bearing ensures repeatability up to ±0.02 mm and enables roughing and finishing of parts in just one clamping system.
The integrated chip evacuation and specially protected spindle provide maximum process safety and vise stability.

RELIABLE

Maximum precision and process reliability

WARWICK manual self-centering vises are designed with a low height to ensure high clamping accuracy and stable clamping force.
The pre-tensioned and backlash-free center bearing ensures repeatability up to ±0.02 mm and enables roughing and finishing of parts in just one clamping system.
The integrated chip evacuation and specially protected spindle provide maximum process safety and vise stability.

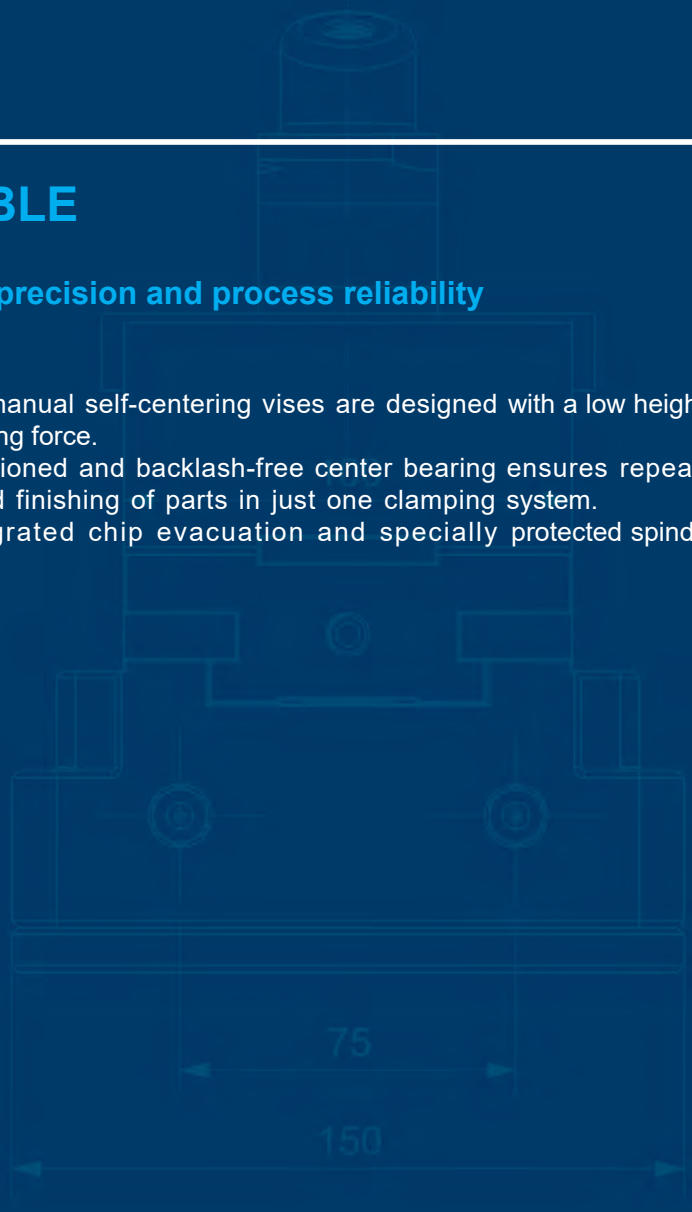

RELIABLE-KSS
Technology

WARWICK center clamping vice KSS is a manual clamping vice. The driving force is provided by the sealed main shaft. The force is generated directly, with no force amplification, and is a linear clamping force. Both jaws open or close simultaneously. Adjustable center with ball bearing preloaded and free of play. Clamping force depends on torque. The clamping range depends on the jaw range used.

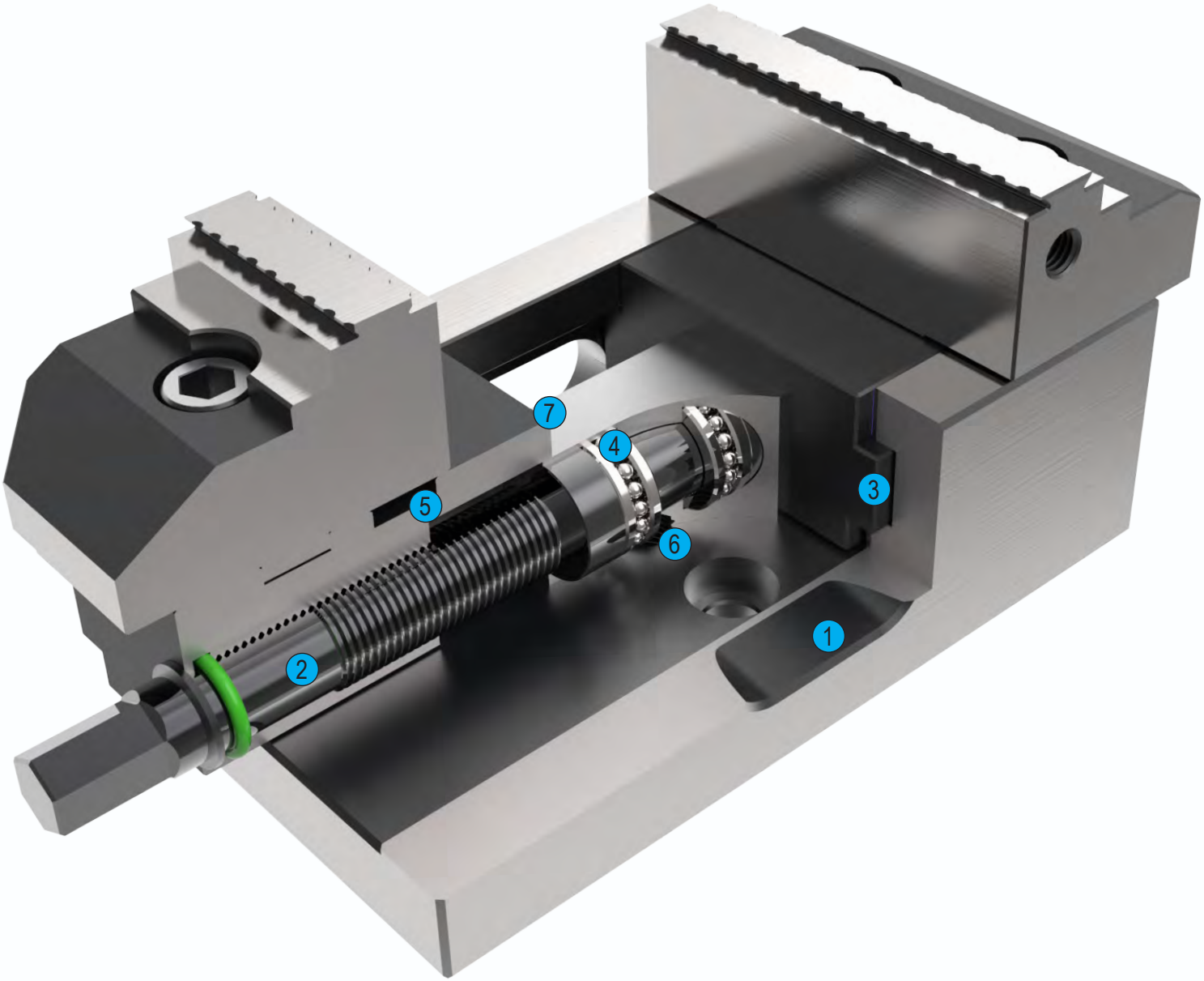

SIMPLE=RELIABLE

1 Drainage slots
For coolant and chips

2 Spindle drive
For highest clamping forces

3 Long jaw guidance
Extended slide rails provide guaranteed stability and precision

4 Ball bearing mounted, backlash-free spindle
For highest repeat accuracy

5 Standard jaw interface
For use of standard system and top jaws made by WARWICK

6 Applicable to zero point positioning system
KSZ-115 positioning pull nail interface

7 Double encapsulated spindle
Provides optimum protection against coolant and chips

RELIABLE - KSS100

Centric Clamping Vise

Concentric Clamping Vise

system jaws included

Scope of delivery
Clamping vise include system jaw, aligning pins and operating manual; without torque wrench

Description	ID	Stroke/jaw [mm]	Max. clamping force [kN]	Max. torque [Nm]	Repeat accuracy vise* [mm]	Weight [kg]
KSS100-150	25110	20	25	100	0.02	6.5

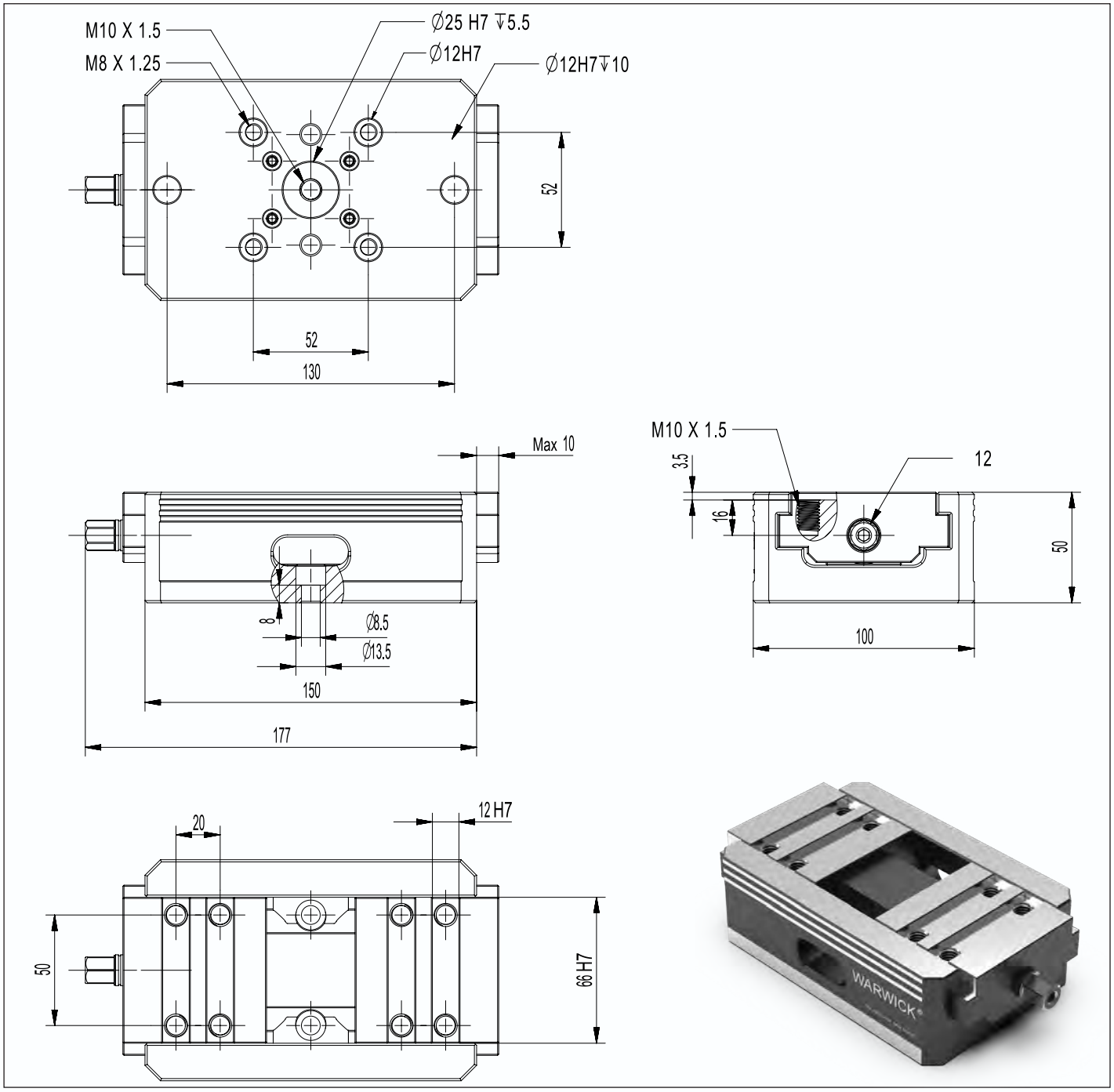

Soft jaw clamping range

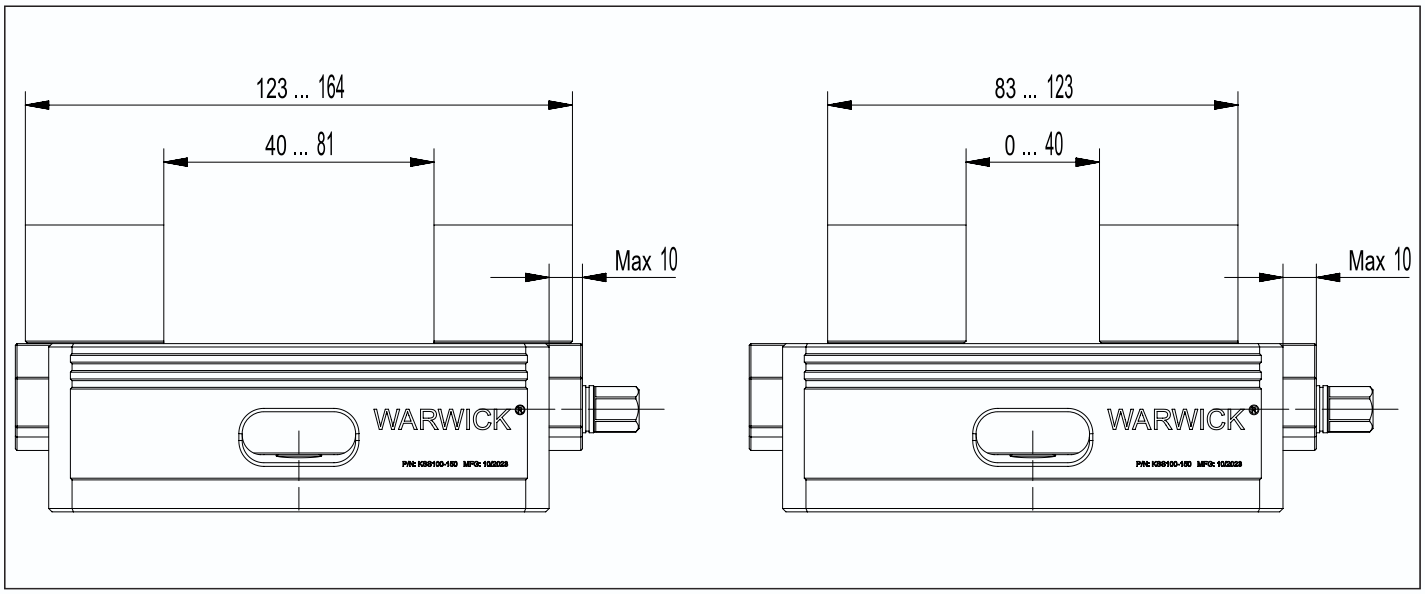

Hard jaw clamping range

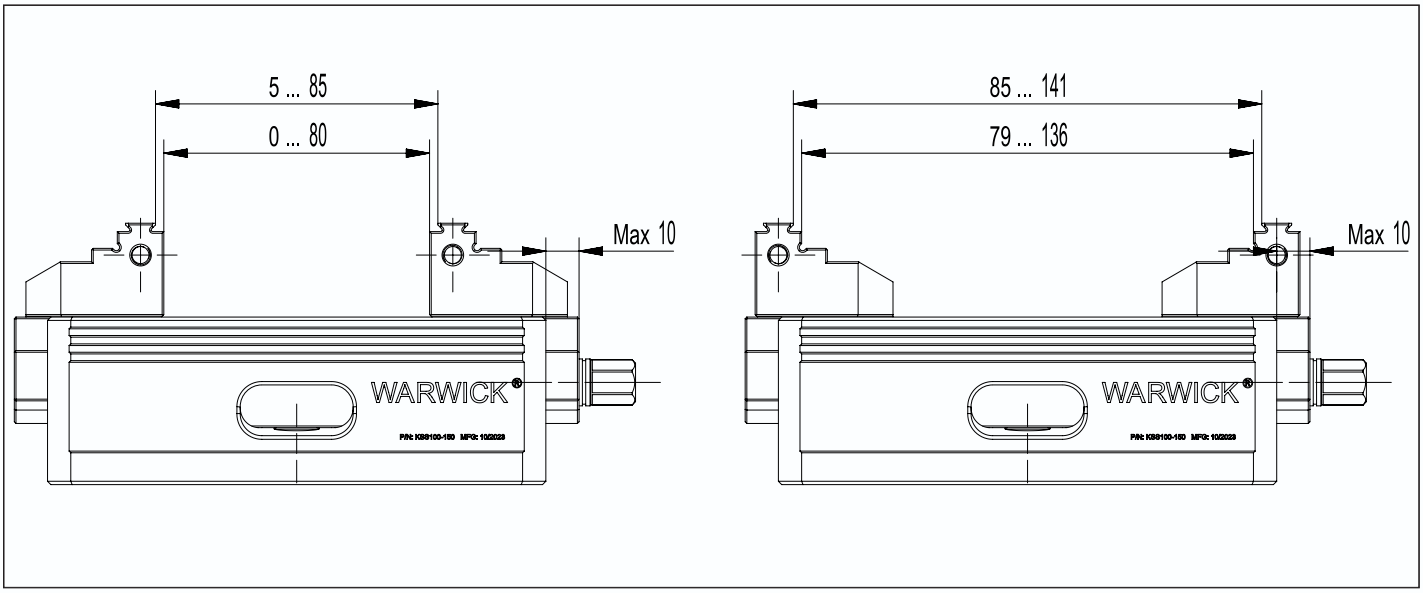

RELIABLE - KSS125

Centric Clamping Vise

Concentric Clamping Vise

system jaws included

Scope of delivery
Clamping vise include system jaw, aligning pins and operating manual;
without system jaws, without torque wrench

Description	ID	Stroke/jaw [mm]	Max. clamping force [kN]	Max. torque [Nm]	Repeat accuracy vise* [mm]	Weight [kg]
KSS125-180	25120		25	100	0.02	9.5

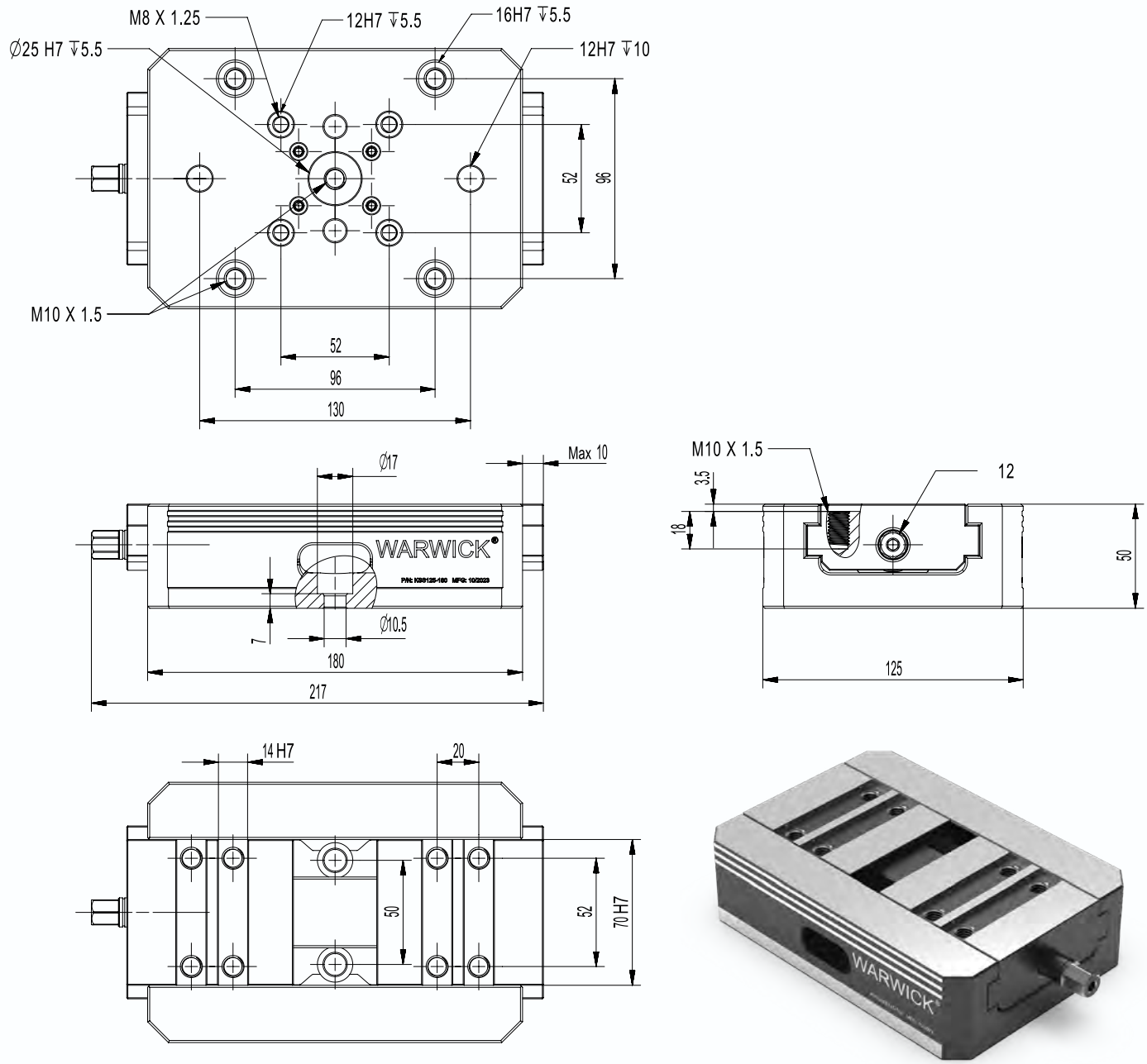

Soft jaw clamping range

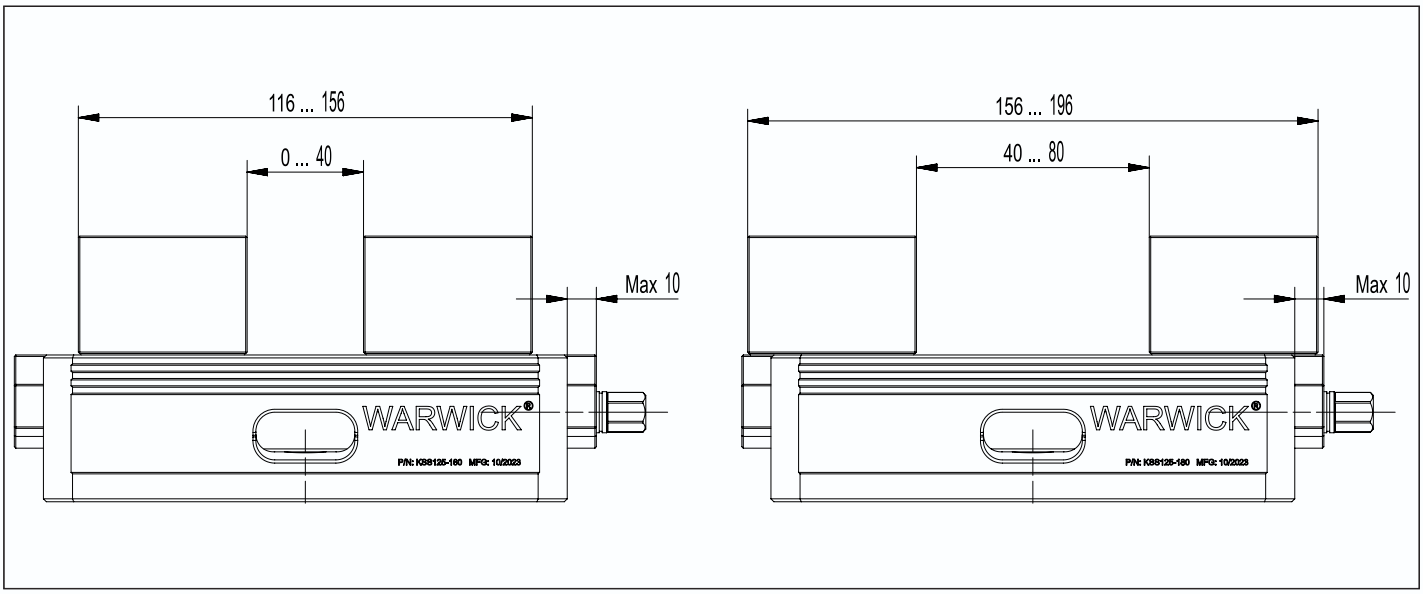

Hard jaw clamping range

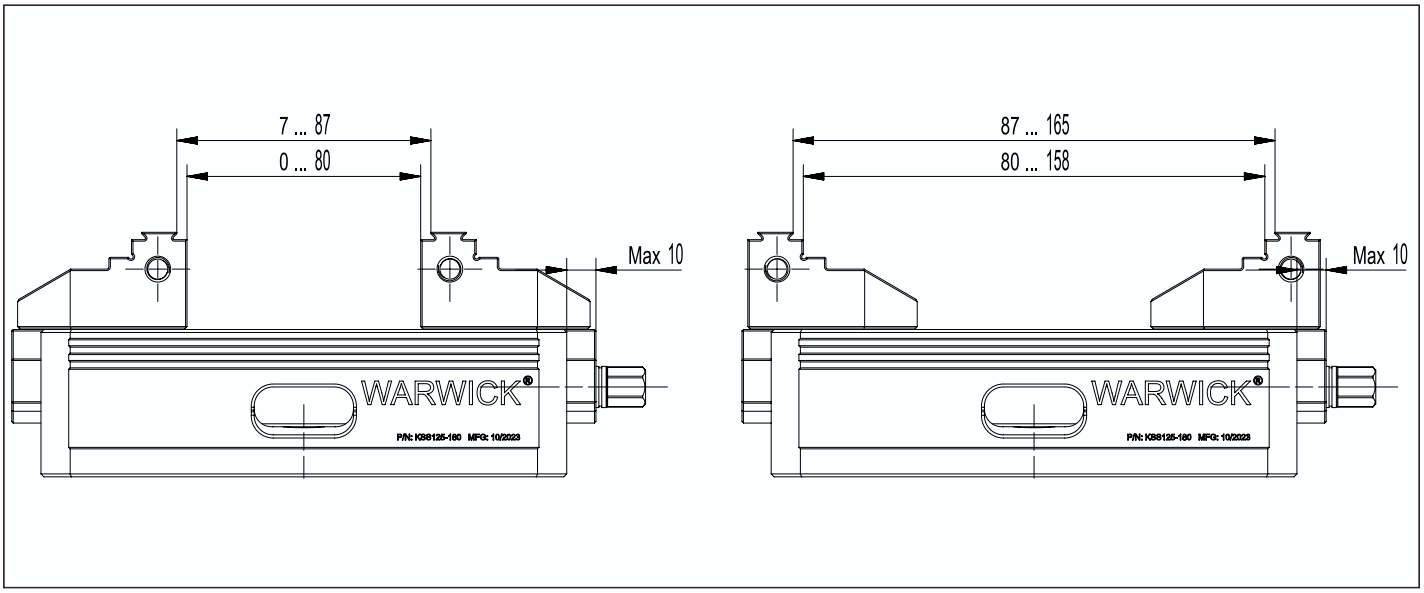

RELIABLE - KSS125

Centric Clamping Vise

Concentric Clamping Vise

system jaws included

Scope of delivery
Clamping vise include system jaw,aligning pins and operating manual;
without system jaws, without torque wrench

Description	ID	Stroke/jaw [mm]	Max. clamping force [kN]	Max. torque [Nm]	Repeat accuracy vise* [mm]	Weight [kg]
KSS125-300	25130	35	25	100	0.02	16.5

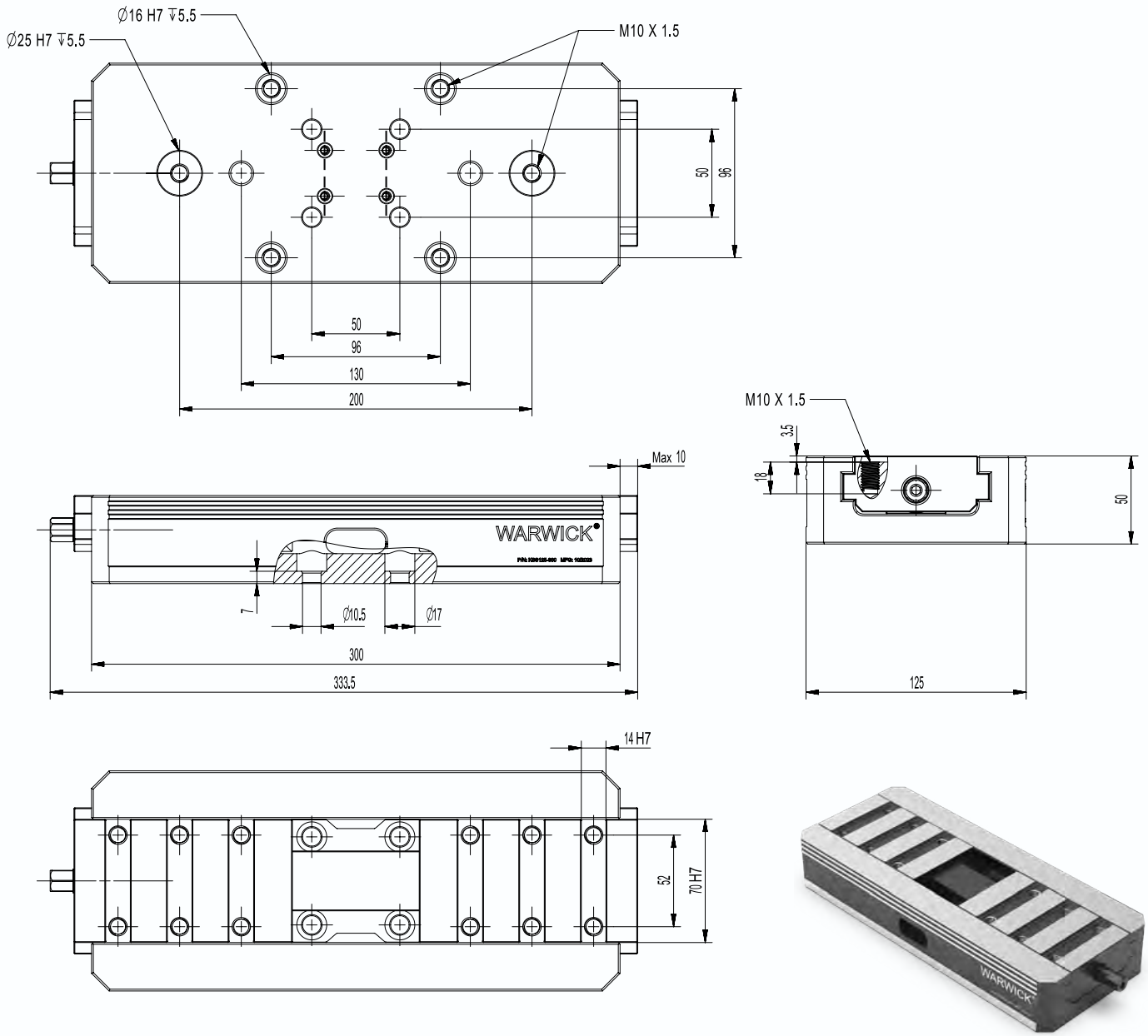

Soft jaw clamping range

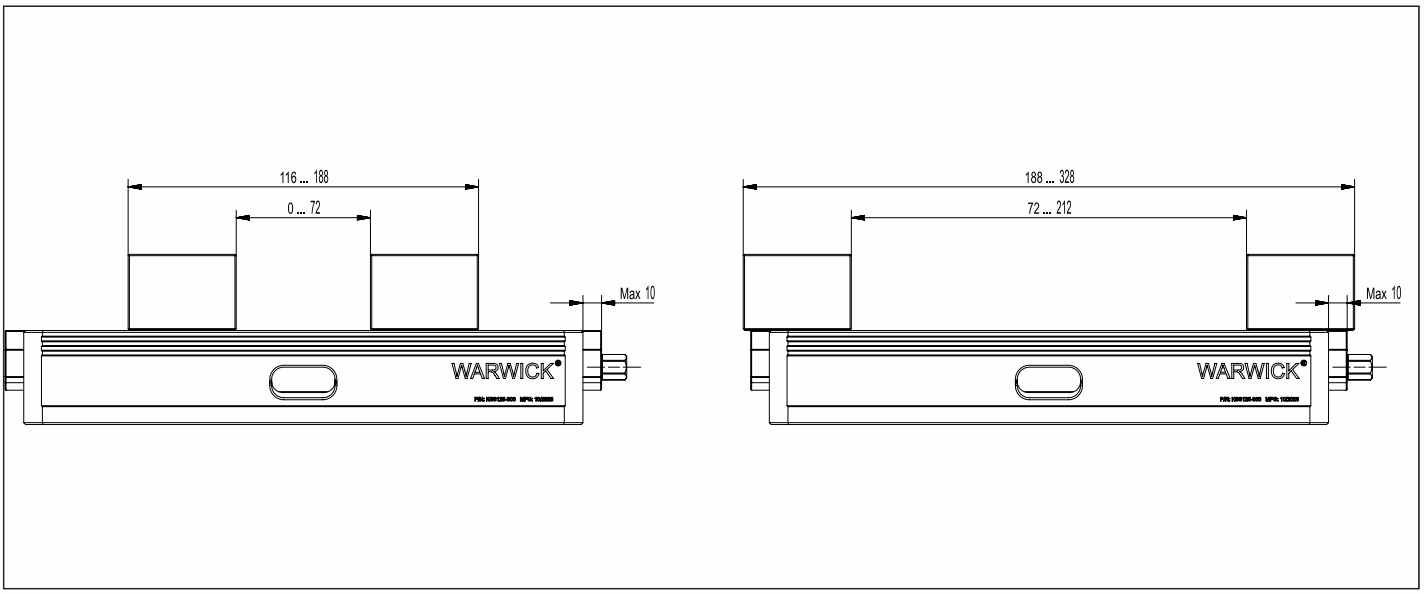

Hard jaw clamping range

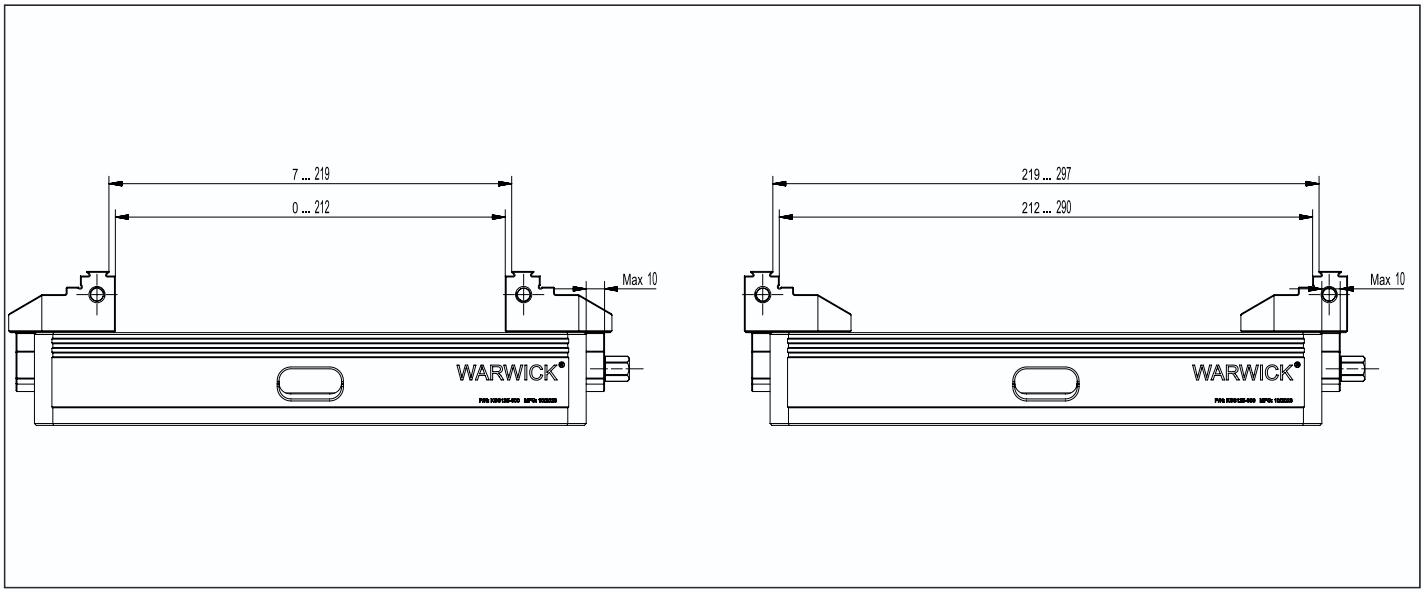

Top Jaw Blanks YZS

Material: 42CrMo
Version: Fastening bores for screw DIN EN ISO 4762 Mounting: Via tongue and groove

Description	ID	Suitable for	A [mm]	B [mm]	C [mm]	D [mm]	E [mm]	F [mm]	G [mm]	H [mm]	I [mm]	J [mm]	Weight [kg]
YZS-100	25106	KSS-100	100	41.5	28	M6	9.5	7	2.5	2.5	50	21	1.8
YZS-125	25107	KSS-125	125	58	33	M8	12.5	10	2.5	3.5	52	29	3.2

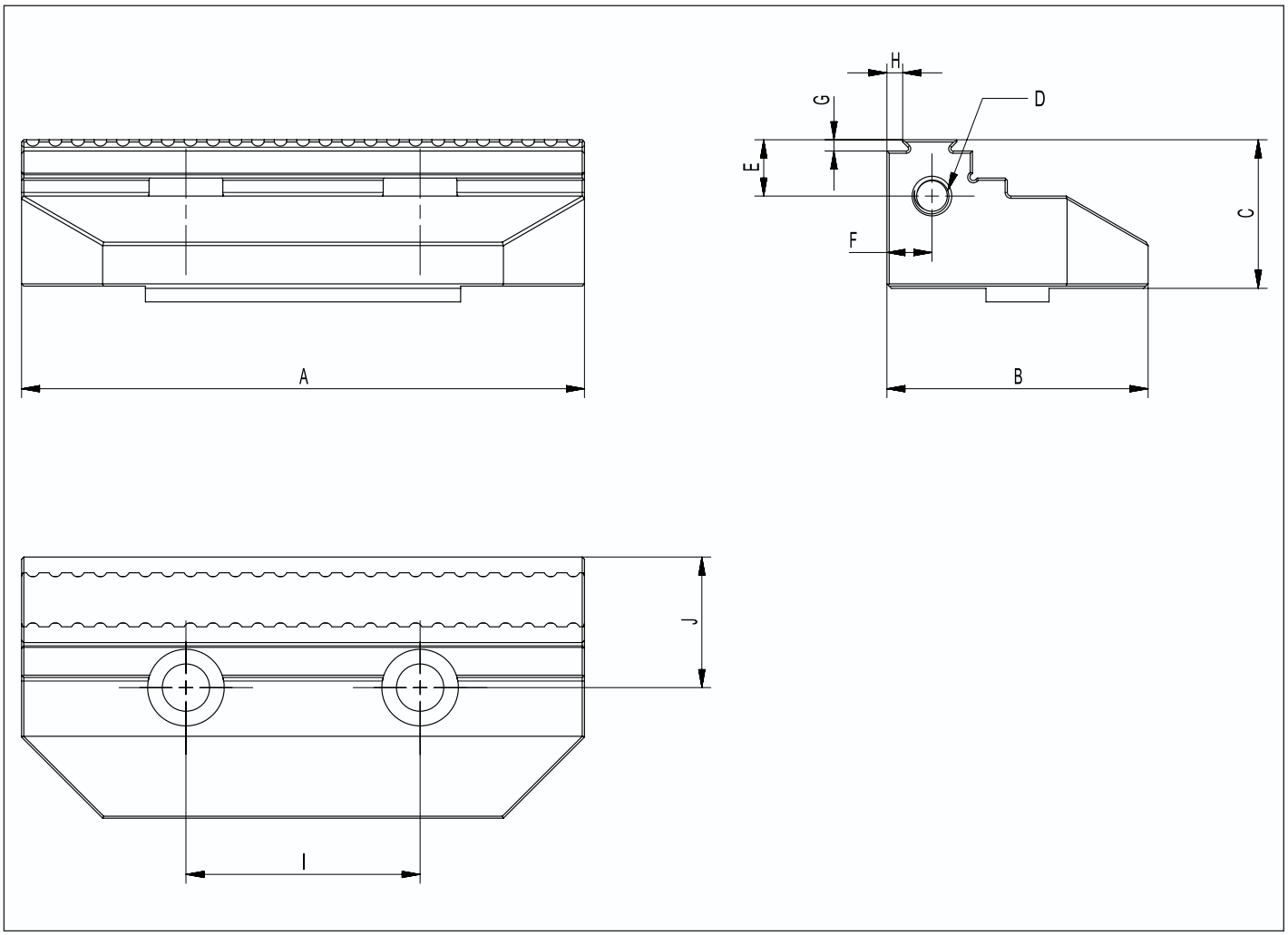

Top Jaw Blanks RZS

Material: S45C, hardenable | Aluminum 6061 Version: Fastening bores for screw DIN EN ISO 4762 Mounting: Via tongue and groove

Description	ID	Suitable for	A [mm]	B [mm]	C [mm]	D [mm]	E [mm]	F [mm]	G [mm]	H [mm]	I [mm]	J [mm]	重量 Weight [kg]
RZS-100A Aluminum 6061	25100	KSS-100	100	41.5	38.25	12	66	50	18	10.5	2	9.5	1.0
RZS-100S Steel S45C	25101												2.5
RZS-125A Aluminum 6061	25102	KSS-125	125	58	43.5	14	70	52	18	10.5	3	12.5	1.8
RZS-125S Steel S45C	25103												4.5

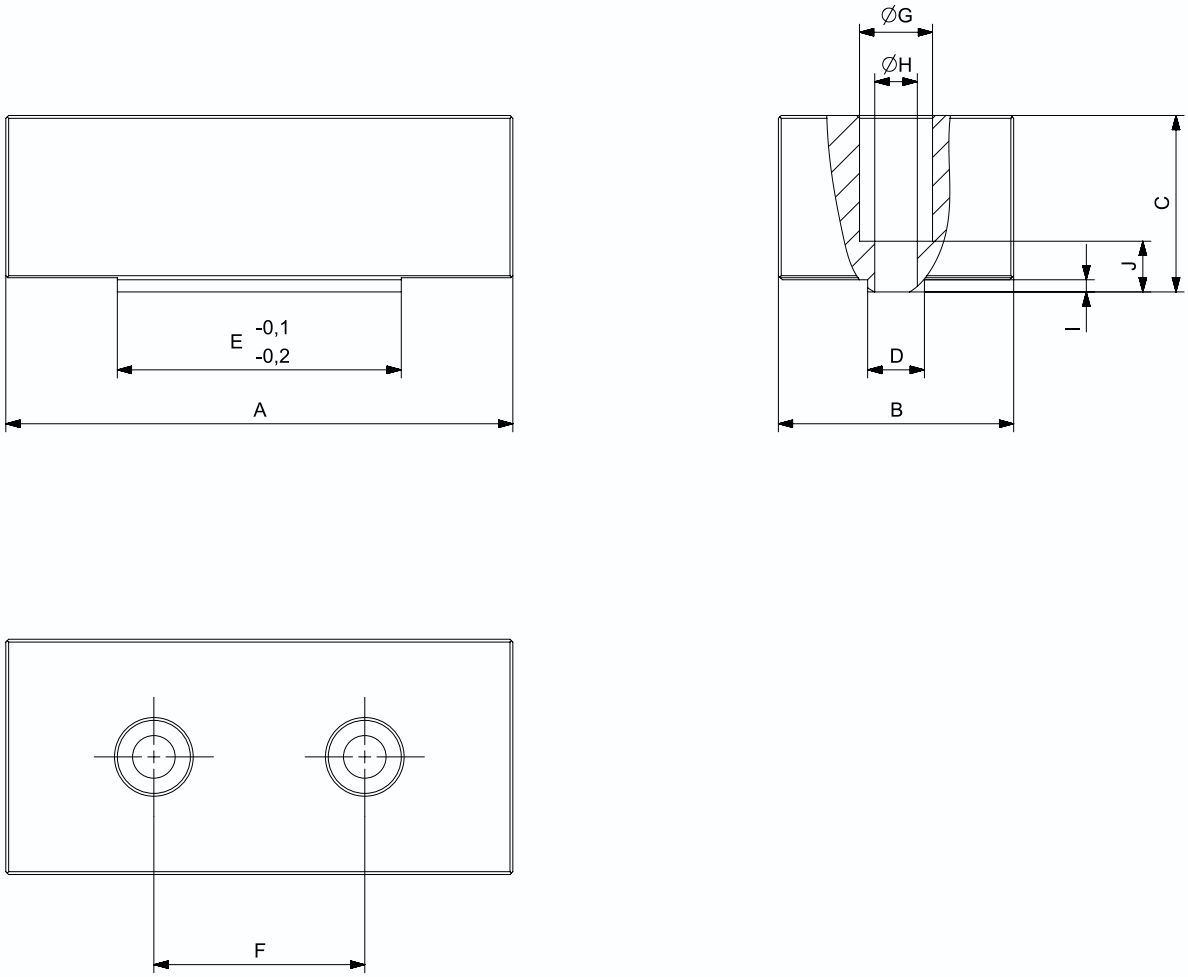

WARWICK®

KSF

self-centering vise

The vise has the function of adjusting the center position.
The zero positioning interface of the KSZ series and the KSG series is integrated.
Vertical accuracy: ≤0.03/100mm
Parallel accuracy: ≤0.01/100mm

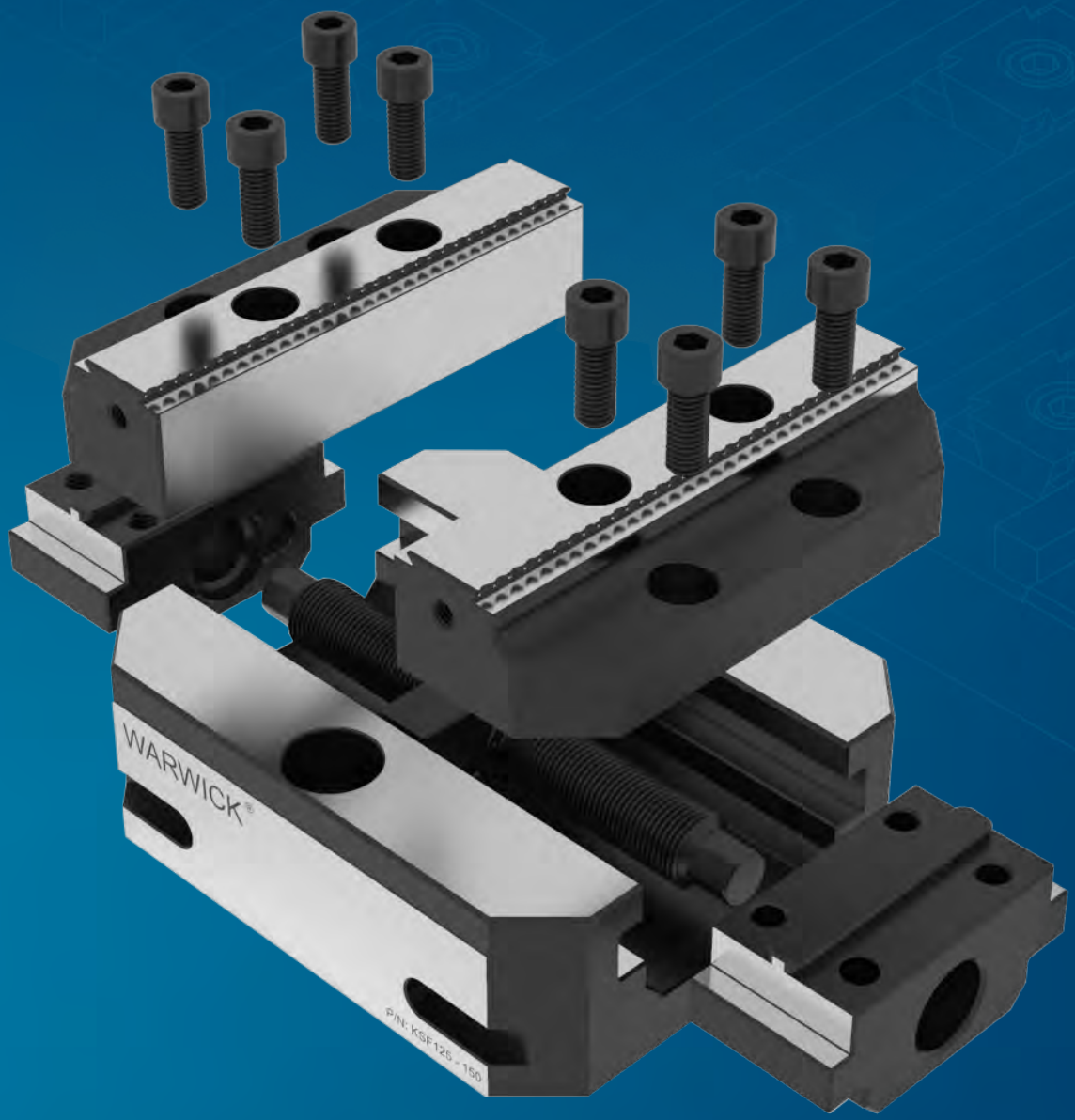

Concentric Clamping Vise

system jaws included

Scope of delivery
Clamping vise include system jaw,aligning pins and operating manual;
without system jaws, without torque wrench

Description	ID	Stroke/jaw [mm]	Max. clamping force [kN]	Max. torque [Nm]	Repeat accuracy vise* [mm]	Weight [kg]
KSF60-100A	25300	20	13	40	0.02	2.8

KSF60-100A

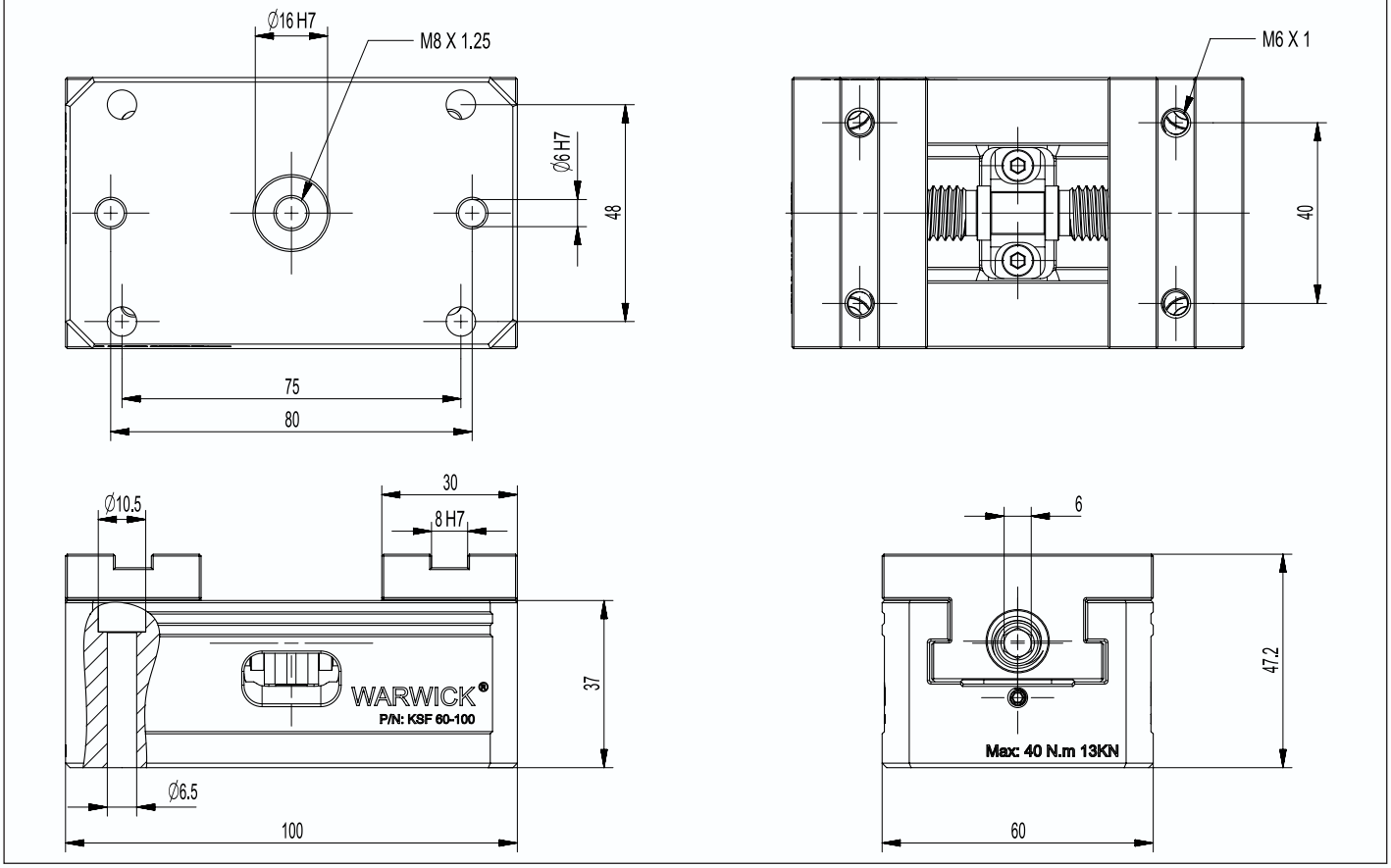

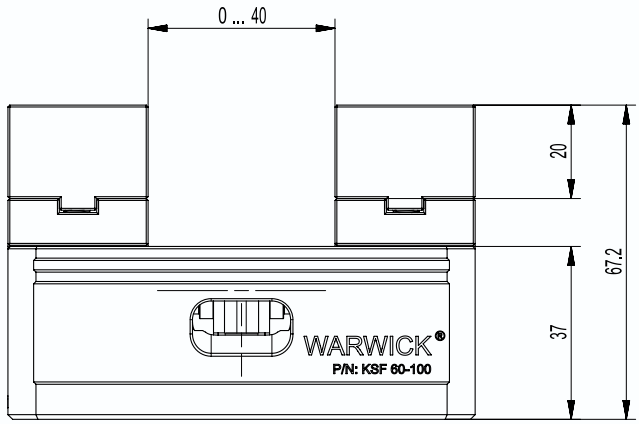

ordable - KSF60-100B

Multi Clamping Vise

Concentric Clamping Vise

system jaws included

Scope of delivery
Clamping vise include system jaw,aligning pins and operating manual;
without system jaws, without torque wrench

Description	ID	Stroke/jaw [mm]	Max. clamping force [kN]	Max. torque [Nm]	Repeat accuracy vise* [mm]	Weight [kg]
KSF60-100B	25301	20	13	40	0.02	2.5

KSF60-100B

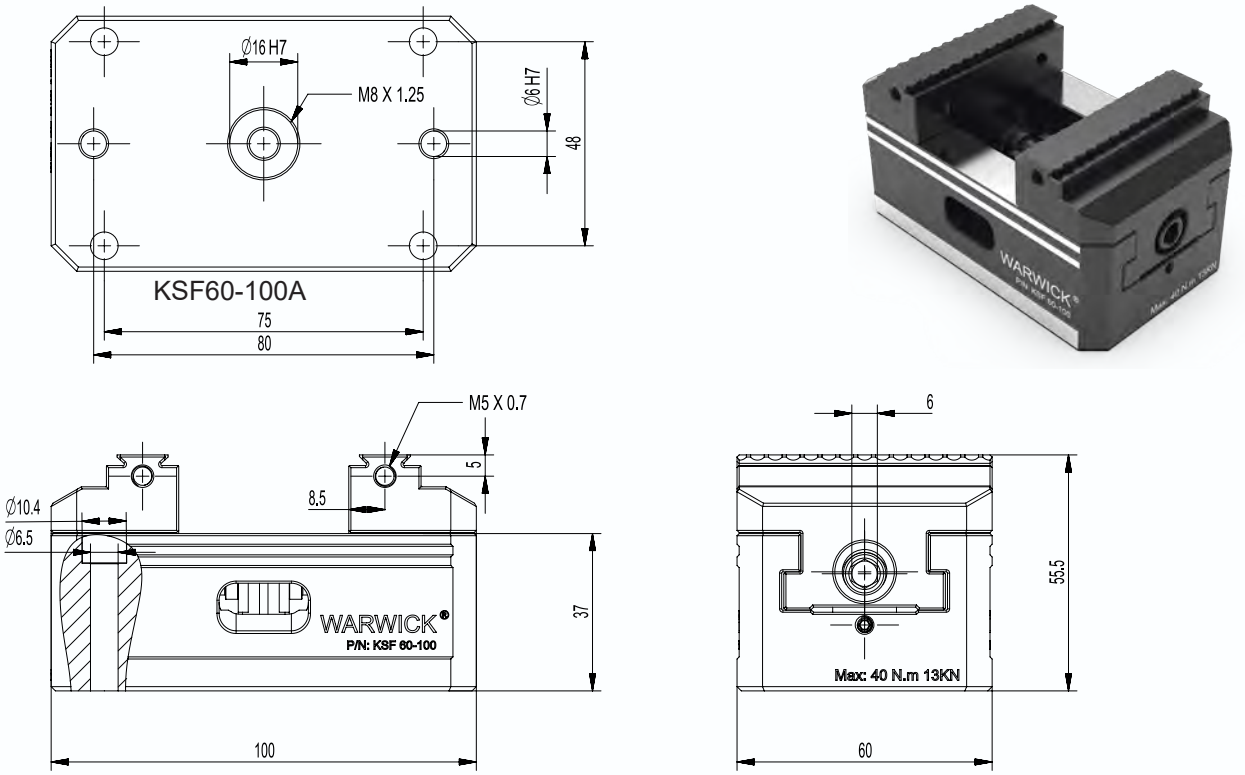

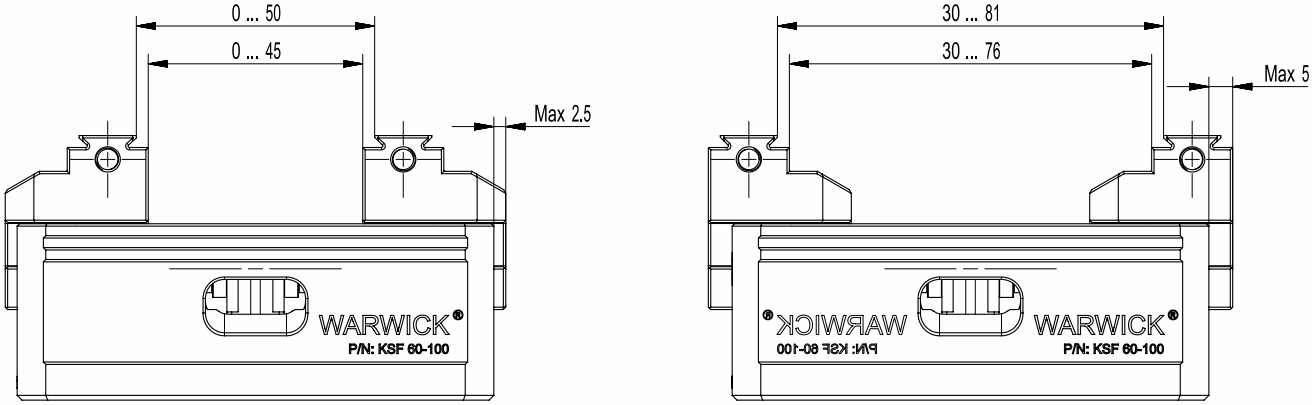

Concentric Clamping Vise

system jaws included

Scope of delivery
Clamping vise include system jaw,aligning pins and operating manual;
without system jaws, without torque wrench

Description	ID	Number of clamps [Pcs]	Max. clamping force [kN]	Max. torque [Nm]	Repeat accuracy vise* [mm]	Weight [kg]
KSF60-100A-4	25302	4	13	40	0.02	22
KSF60-100B-4	25303	4	13	40	0.02	21

KSF60-100A-4

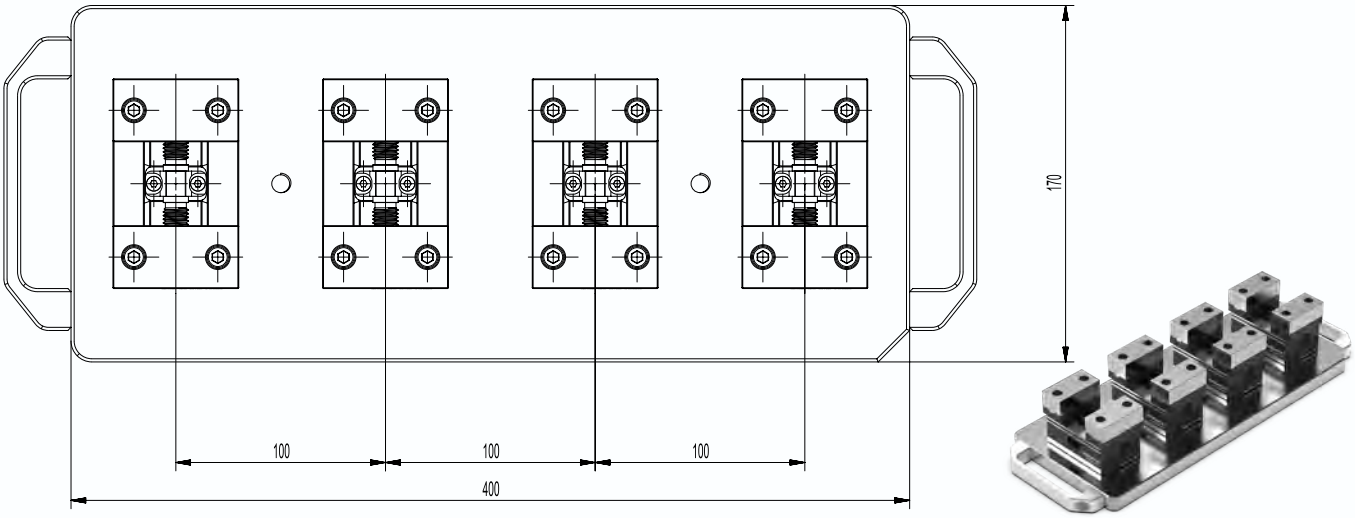

KSF60-100B-4

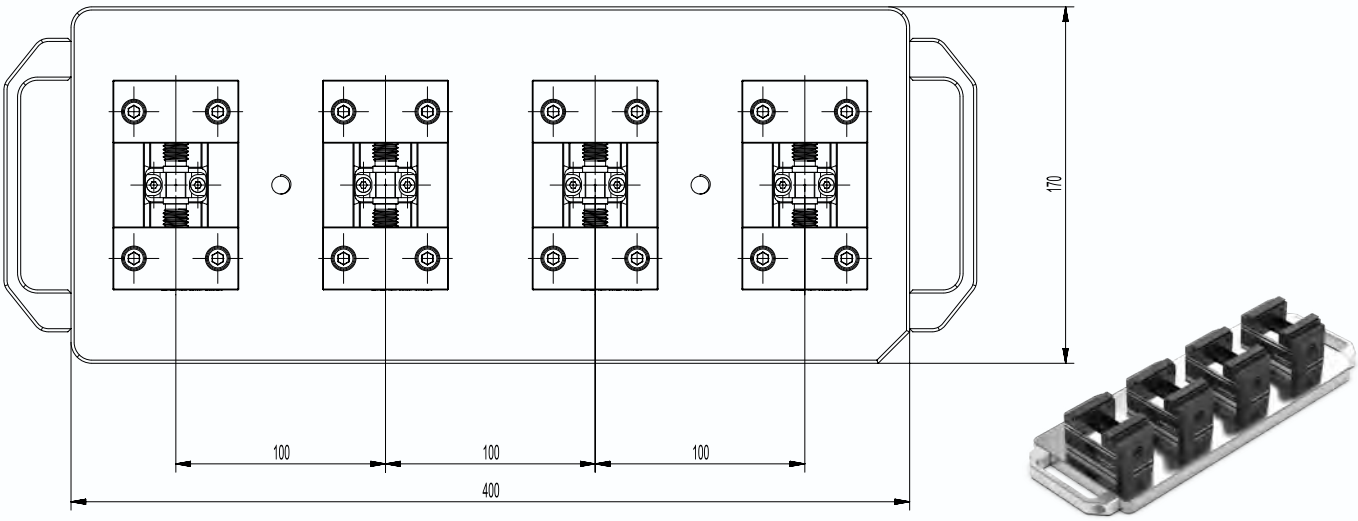

ordable - KSF75 - 100

Multi Clamping Vise

Concentric Clamping Vise

system jaws included

Scope of delivery
Clamping vise include system jaw,aligning pins and operating manual;
without system jaws, without torque wrench

Description	ID	Stroke/jaw [mm]	Max. clamping force [kN]	Max. torque [Nm]	Repeat accuracy vise* [mm]	Weight [kg]
KSF 75-100	25304	-	15	70	0.02	3.5

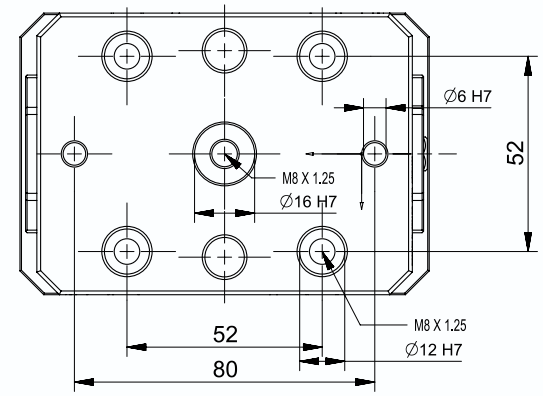

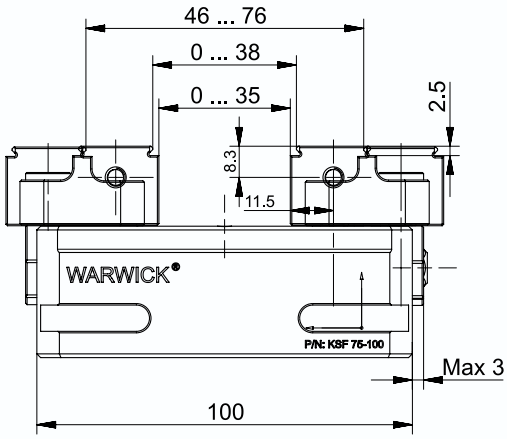

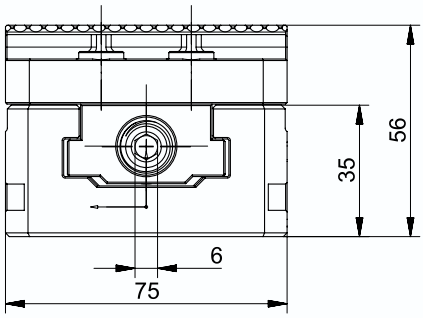

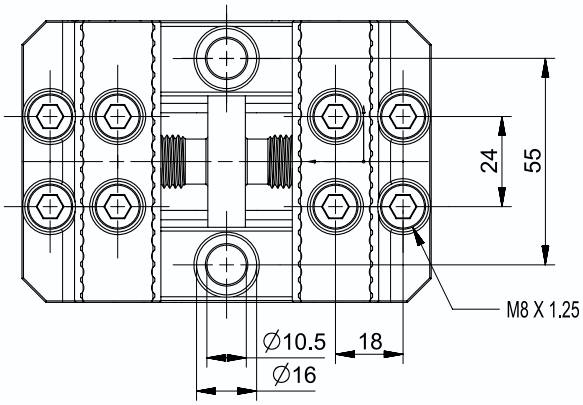

Concentric Clamping Vise

system jaws included

Scope of delivery
Clamping vise include system jaw,aligning pins and operating manual;
without system jaws, without torque wrench

Description	ID	Stroke/jaw [mm]	Max. clamping force [kN]	Max. torque [Nm]	Repeat accuracy vise* [mm]	Weight [kg]
KSF 75-130	25305	-	15	70	0.02	4.8

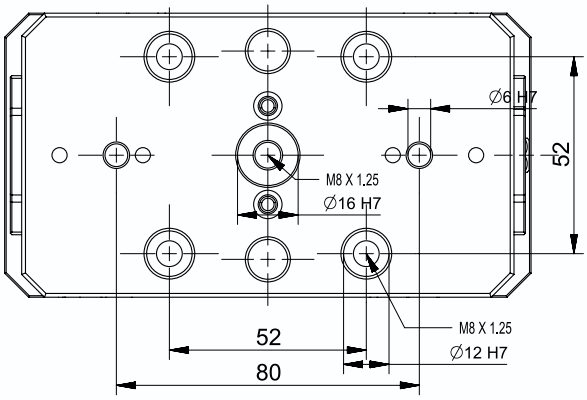

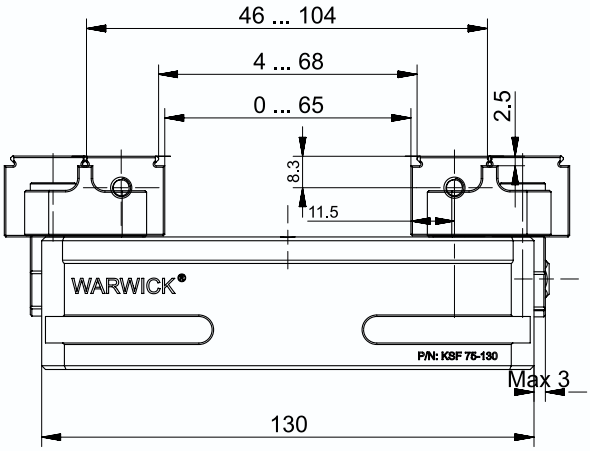

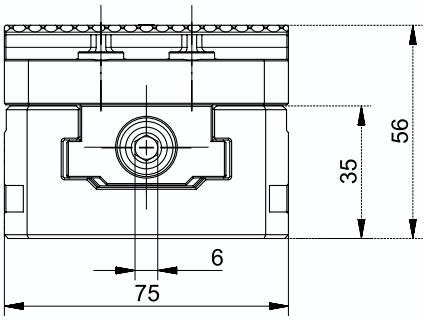

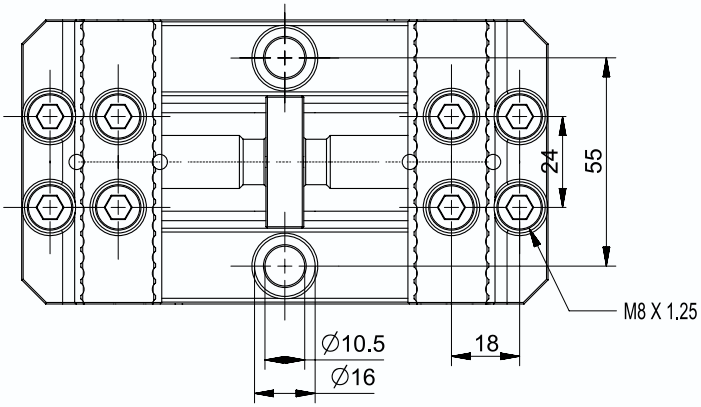

ordable - KSF125 - 150

Multi Clamping Vise

Concentric Clamping Vise

system jaws included

Scope of delivery
Clamping vise include system jaw,aligning pins and operating manual;
without system jaws, without torque wrench

Description	ID	Stroke/jaw [mm]	Max. clamping force [kN]	Max. torque [Nm]	Repeat accuracy vise* [mm]	Weight [kg]
KSF125-150	25306	-	20	100	0.02S	7.64

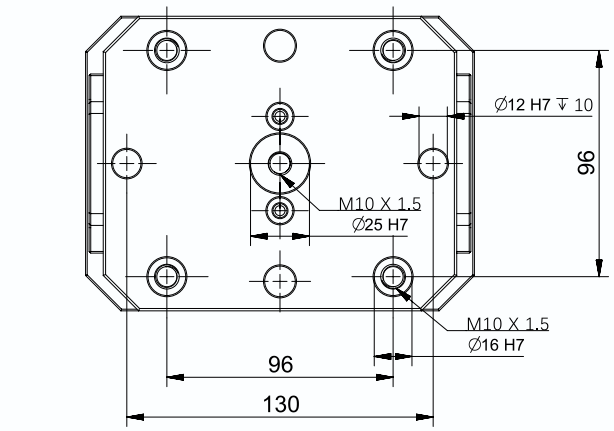

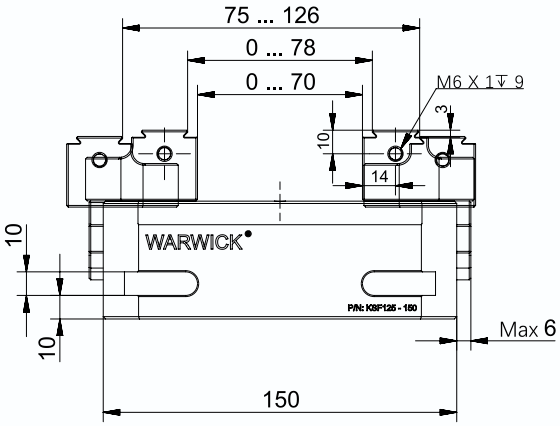

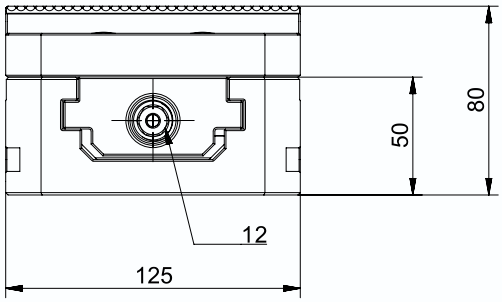

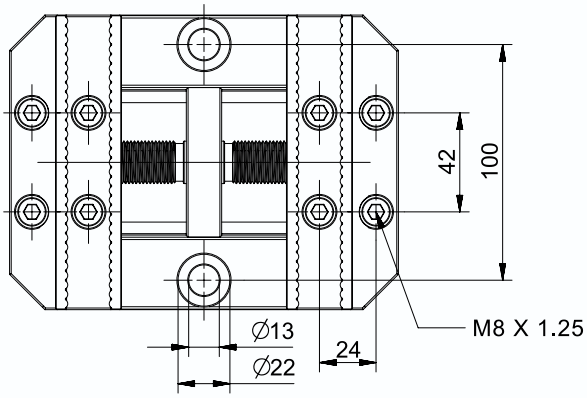

Concentric Clamping Vise

system jaws included

Scope of delivery
Clamping vise include system jaw,aligning pins and operating manual;
without system jaws, without torque wrench

Description	ID	Stroke/jaw [mm]	Max. clamping force [kN]	Max. torque [Nm]	Repeat accuracy vise* [mm]	Weight [kg]
KSF125-250	25307	-	20	100	0.02	10.8

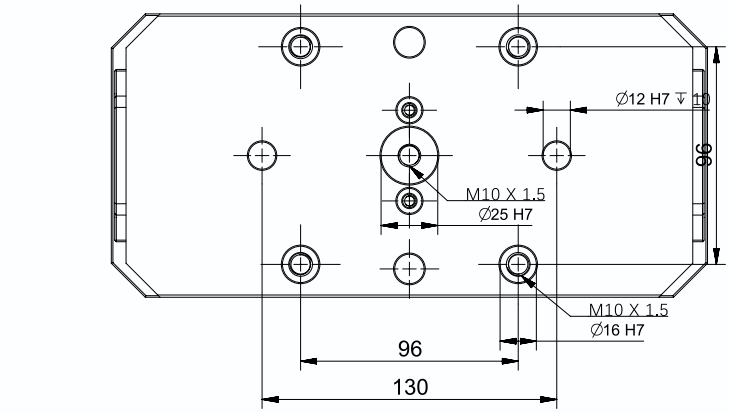

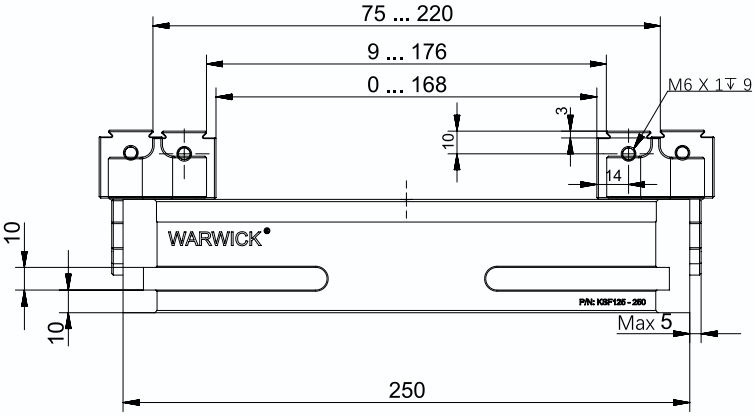

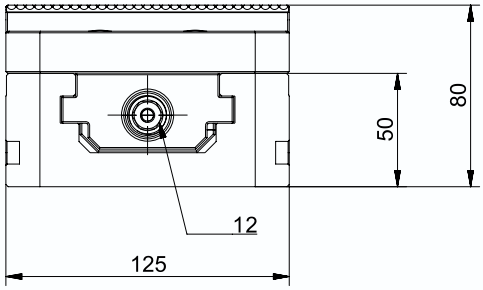

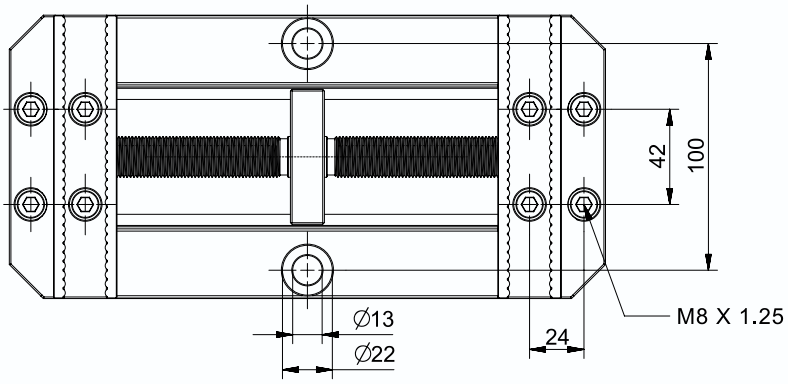

ordable-KSD

Multi-station vice
Grinding process, surface hardening treatment, extremely high position accuracy.

Applied to the SIMPLE-KSZ system, it will exhibit near-perfect exchange position accuracy.

Flexible adjustment range and high repeat position accuracy greatly reduce downtime and tool changes.

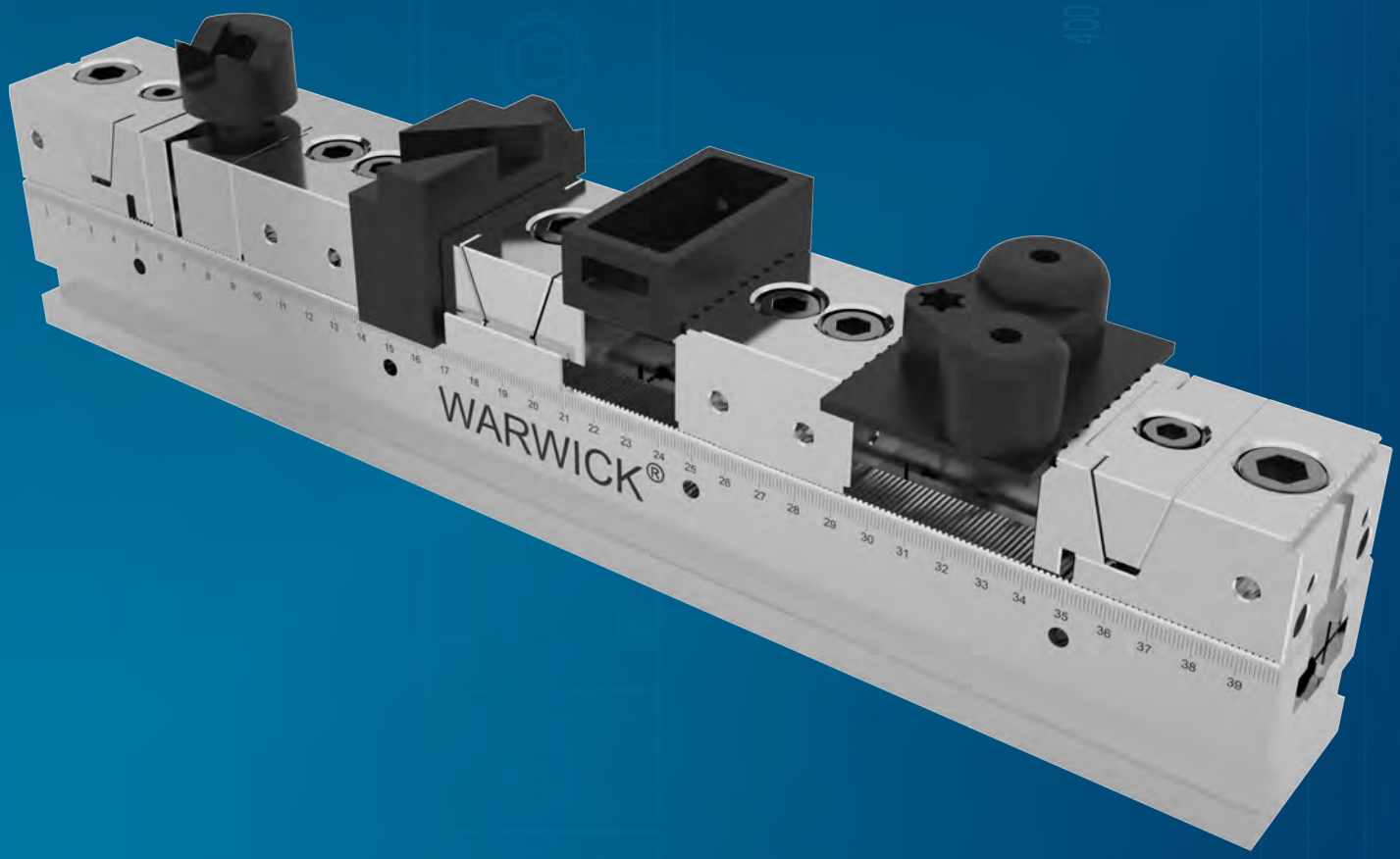

Advantages – Y

Hardened and ground serration
For maximum precision and form stability

Laser-etched ruler
Quick and precise preadjustment

Combination of several clamping rails
High degree of flexibility

Extremely high loading density
For economical machining

Vast chuck jaw program
Optimal adjustment to new clamping tasks

Only one actuation key is necessary for the multiple clamping vise Optimal operator convenience

SIMPLE-KSZ interface
Versatile range of combinations due to the SIMPLE-KSZ modular system. Even shorter set-up times

Definition clamping force
The clamping force is the arithmetic sum of the various forces on the chuck jaws under the maximum pressure and maximum torque.

Technology

The movable jaw can be positioned on the guide rail by a serration system. The ruler with laser marking ensures that the jaws are quickly and evenly placed on the rail. The movable pressure block drives the jaws to achieve clamping. The side threads of the adjusting claw and the claw are used as a positioning for installing the workpiece.

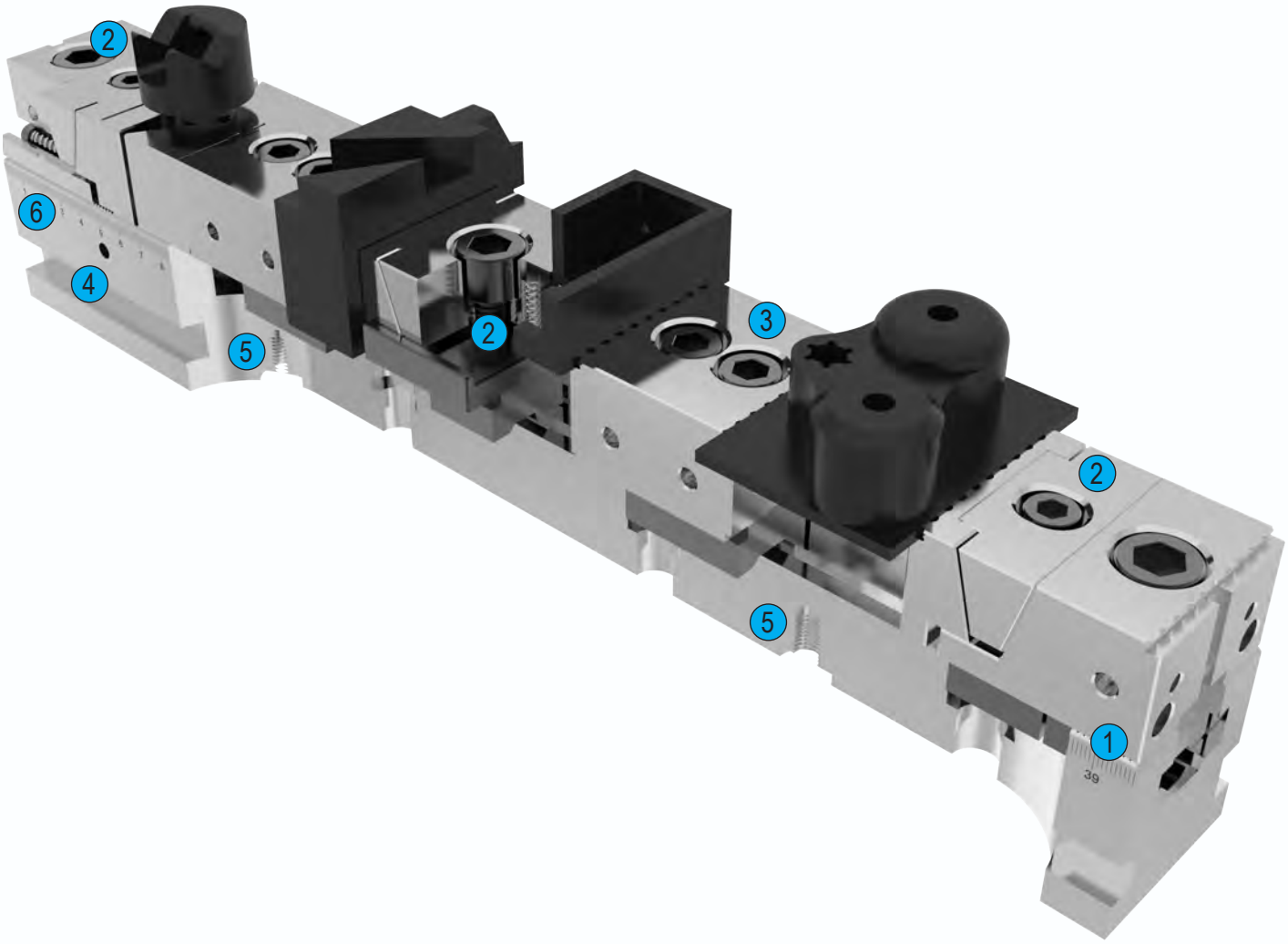

Technology

1 Hardened and ground serration
For maximum precision and form stability

2 Clamping assembly
Optimal adjustment for new clamping tasks

3 Fixed jaw can be turned 180°
High degree of flexibility

4 High-strength clamping rails
Ensure the best production results

5 SIMPLE-KSZ interface
Can be adapted to all SIMPLE-KSZ clamping stations

6 Laser-etched ruler
For quick chuck jaw positioning

Model introduction

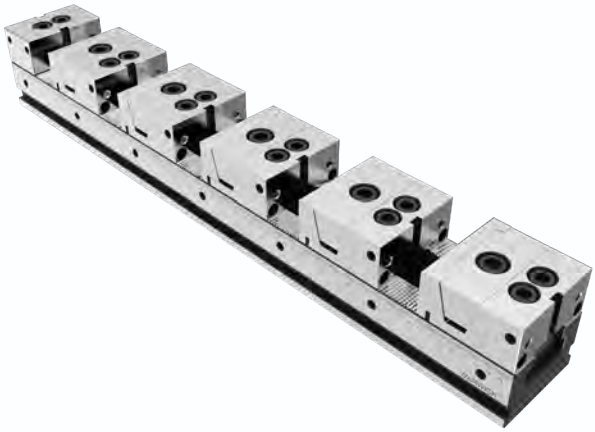

KSD:
Multi Clamping Vise

Model

50: 50MM

88: 88MM

Width

KSD 88 – 650 – 5 FD

Length

150: 150MM

300: 300MM

400: 400MM

500: 500MM

600: 600MM

650: 650MM

700: 700MM

Number of workpieces clamped

1 : 1 PCS

2 : 2 PCS

3 : 3PCS

4 : 4 PCS

5 : 5 PCS

6 : 6 PCS

7 : 7 PCS

Clamping model

FD:
One-way Clamping

FDT:
Jagged type One-way Clamping

MD:
Two-way clamping

MDT:
Jagged type Two-way clamping

Use Cases

1. **FD-T** Tooth type unidirectional clamping
2. **GD-T** Tooth type fixed claw
3. **MD-T** Tooth type two-way clamping
4. **MD** Two-way clamping
5. **GD** Fixed claw
6. **RZ-V** V-shaped soft claw
7. **RZ-B** B-type soft jaw
8. **FD** One-way clamping
9. **KSZ** Zero Point Positioning System

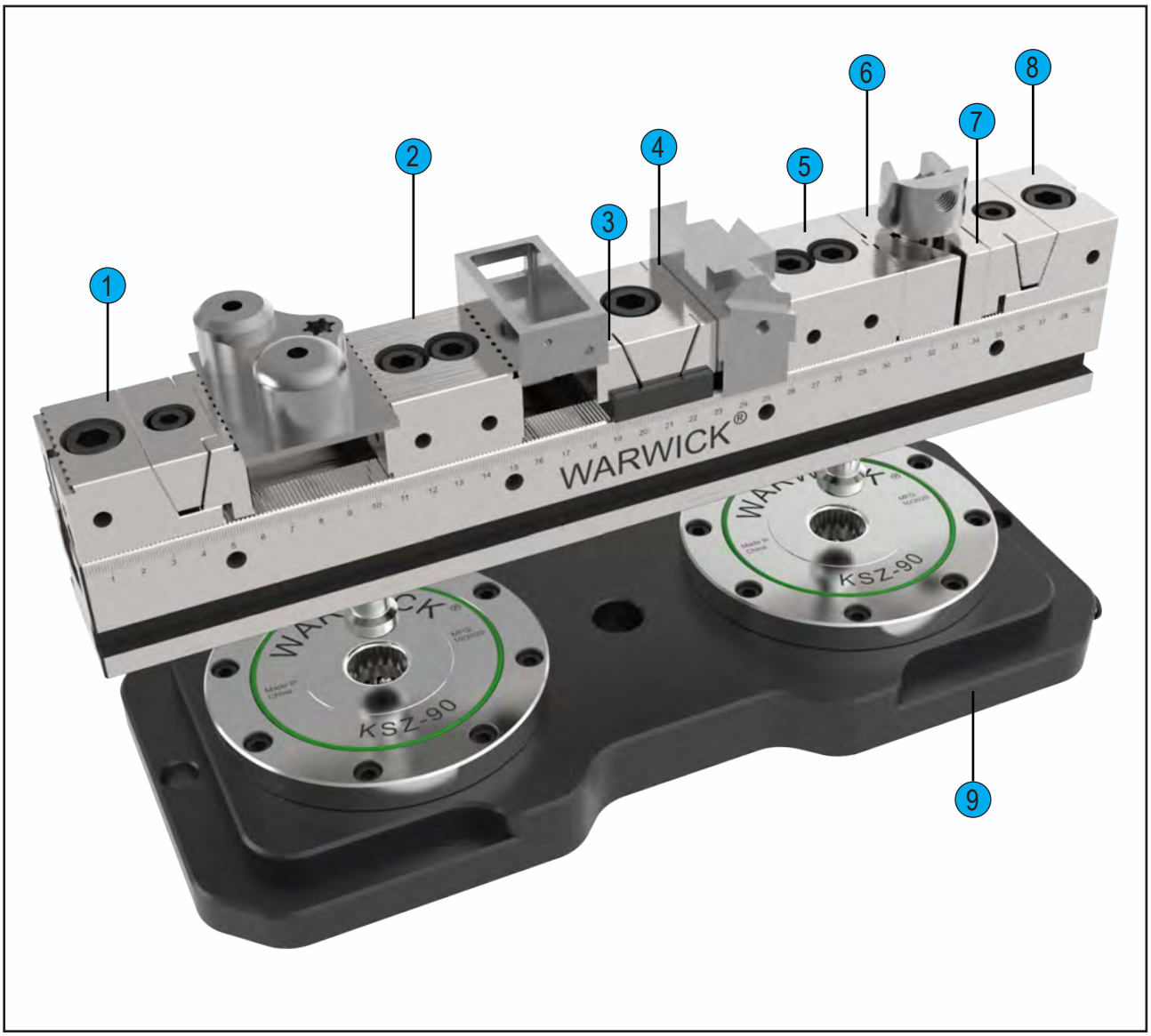

Technology

standard type

Plane clamping workpiece

Different types of soft jaws can be installed

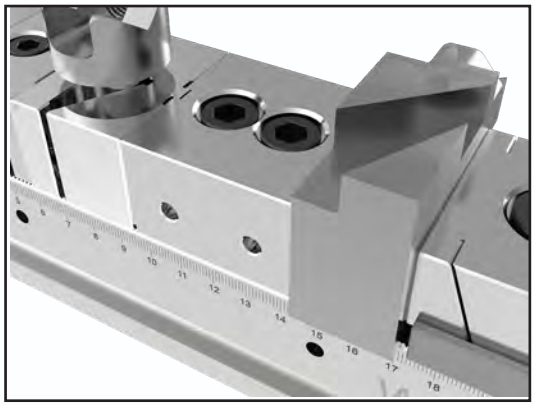

T powerful type:

Sawtooth to increase the

2.5mm stepped band sawtooth

Different types of soft jaws can be installed

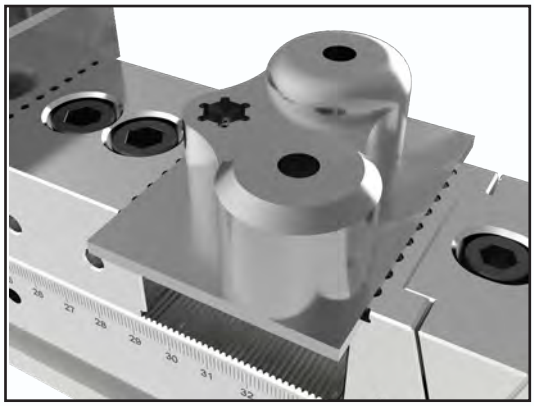

FD standard type

One-way clamping

Claw-shaped installation positioning groove

Built-in return spring

Compact size allows more workstations

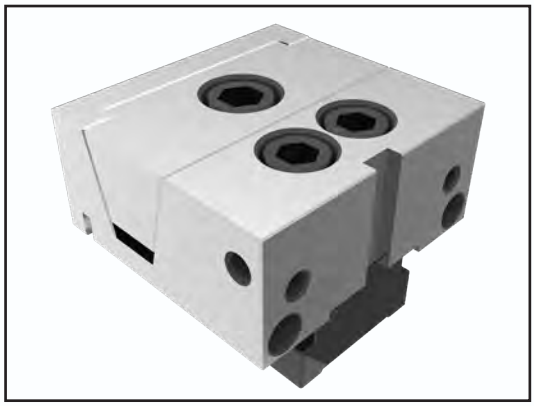

FD-T powerful type:

Serrated clamping surface

One-way clamping

Claw-shaped installation positioning groove

Built-in return spring

Compact size allows more workstations

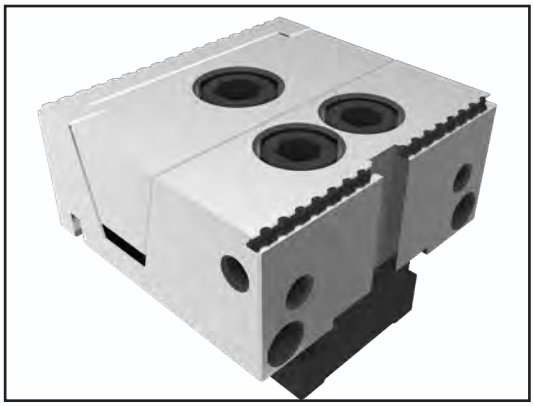

Technology

MD standard type

Two-way clamping

Claw-shaped installation positioning groove

Built-in return spring

Compact size allows more workstations

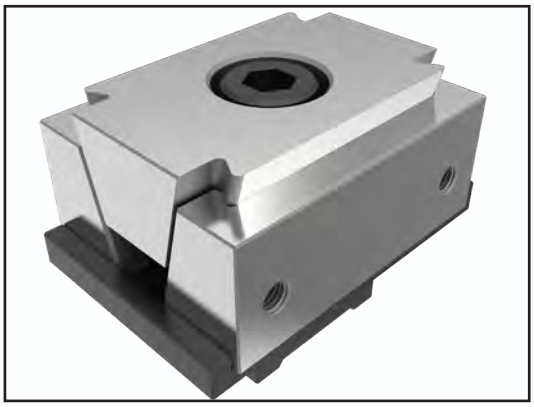

MD-T powerful type:

Serrated clamping surface

Two-way clamping

Claw-shaped installation positioning groove

Built-in return spring

Compact size allows more workstations

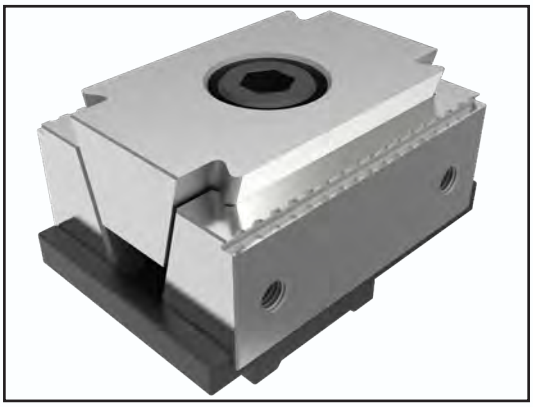

GD standard type：

Common for FD and MD series grippers

Claw installation positioning groove

Compact size brings more workstations

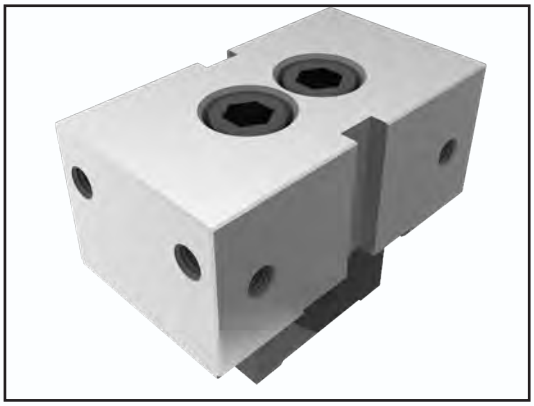

GD-T powerful type:

Common for FD and MD series grippers

Serrated clamping surface

Claw installation positioning groove

Compact size brings more workstations

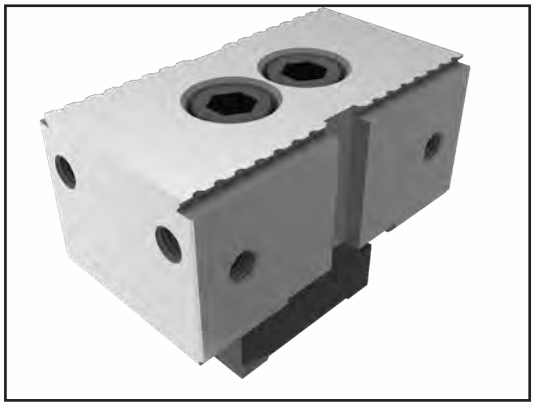

Clamping Capacity

The clamping range shows the max.
The maximum size of the workpiece that can be clamped-depends on the length of the guide rail and the number of clamping areas.

Description		Number of workpieces clamped								
		1	2	3	4	5	6	7	8	9
KSD50-300	Maximum workpiece clamping size	192	67	25	4					
KSD50-400		292	117	58	29	12				
KSD50-500		392	167	92	54	32	17	6		
KSD50-600		492	217	125	79	52	33	20	10	3
KSD50-650		542	242	142	92	62	42	27	17	8

FD TYPE Adjustable jaws with Parallel plane

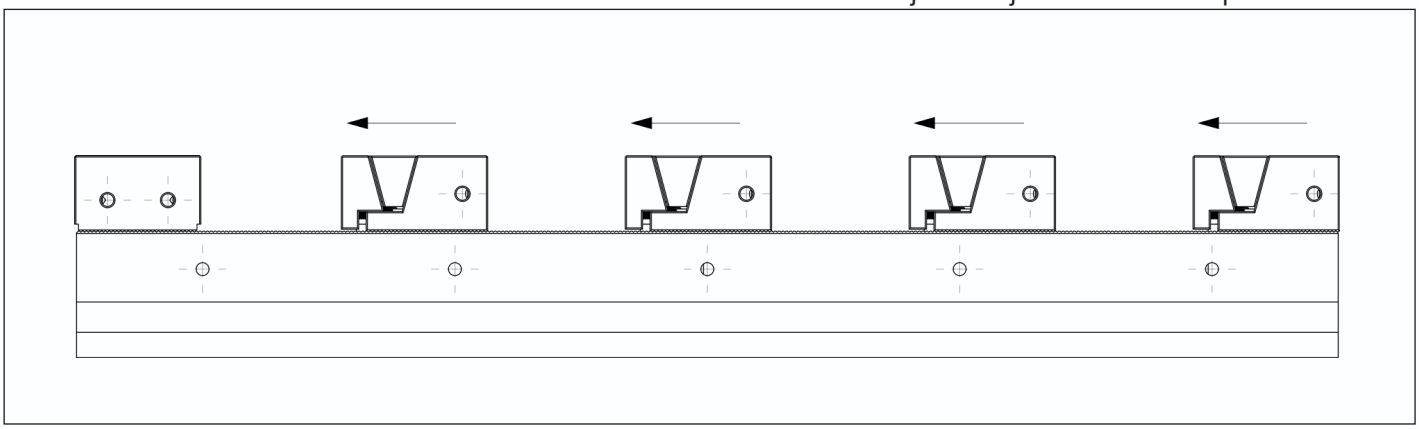

Description		Number of workpieces clamped								
		1	2	3	4	5	6	7	8	9
KSD50-300	Maximum workpiece clamping size	197	72	30	9					
KSD50-400		297	122	63	34	17				
KSD50-500		397	172	97	59	37	22	11		
KSD50-600		497	222	130	84	57	38	25	15	8
KSD50-650		547	247	147	97	67	47	32	22	13

FD-T TYPE Adjustable jaws with Toothed steps

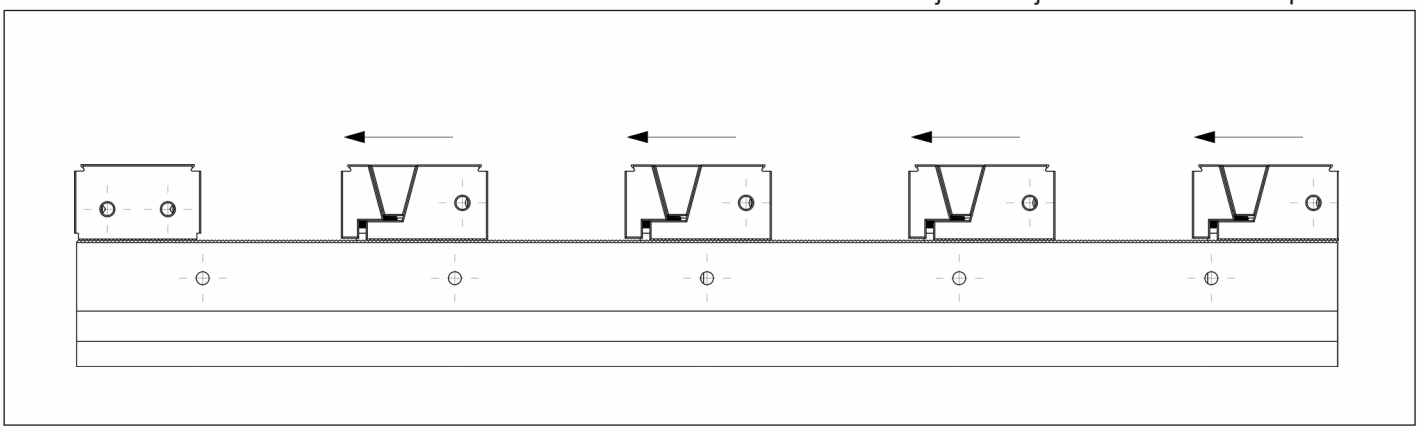

Clamping Capacity

The clamping range shows the max.
The maximum size of the workpiece that can be clamped-depends on the length of the guide rail and the number of clamping areas.

Description		Number of workpieces clamped							
		2	4	6	8	10	12	14	
KSD50-300	Maximum workpiece clamping size	78	20						
KSD50-400		128	45	18	4				
KSD50-500		178	70	35	16	6			
KSD50-600		228	95	50	29	16	7		
KSD50-650		253	108	58	35	21	11	4	

MD TYPE With wedge clamping jaws

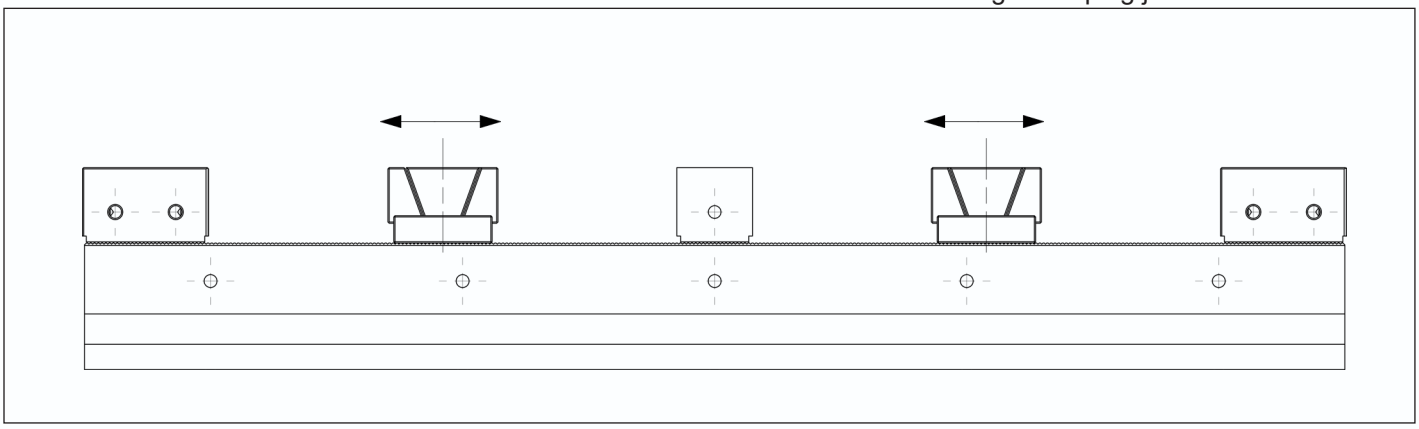

Description		Number of workpieces clamped							
		2	4	6	8	10	12	14	
KSD50-300	Maximum workpiece clamping size	80	22						
KSD50-400		130	47	20	6				
KSD50-500		180	72	37	18	8			
KSD50-600		230	97	52	31	18	9		
KSD50-650		255	110	60	37	23	13	6	

MD-T TYPE With Stepped wedge clamping jaws

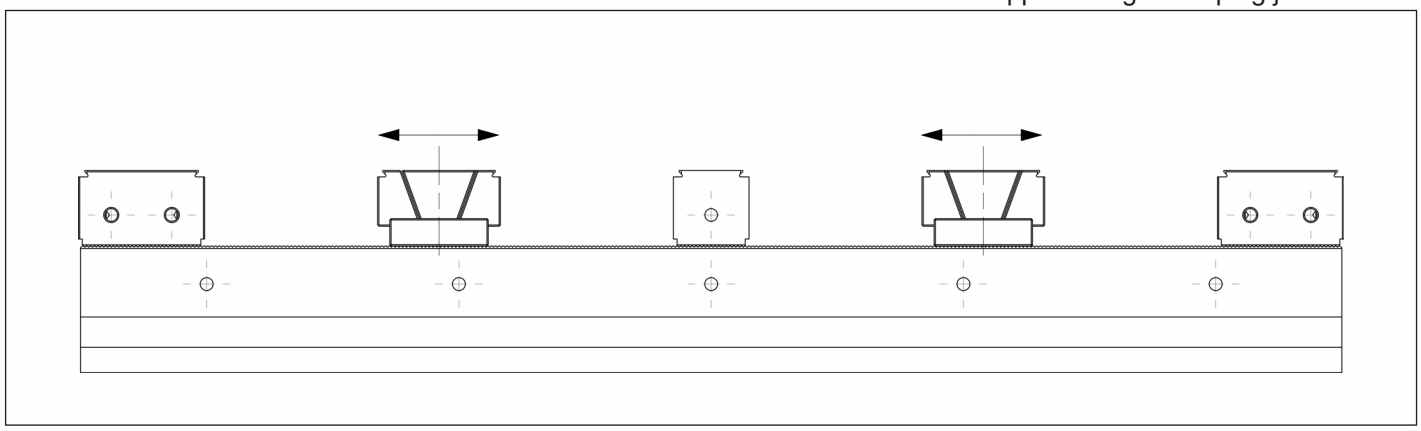

Clamping Rail

Without system jaws

Scope of delivery
Clamping rail inclusive operating manual; without system jaws

Description	ID	Rail width [mm]	Clamping force [kN]	Max. torque [N.m]	Weight [kg]
KSD50-300	21010	50	17.86	30(FD) 60(MD)	4

KSD-50-300-**FD TYPE**

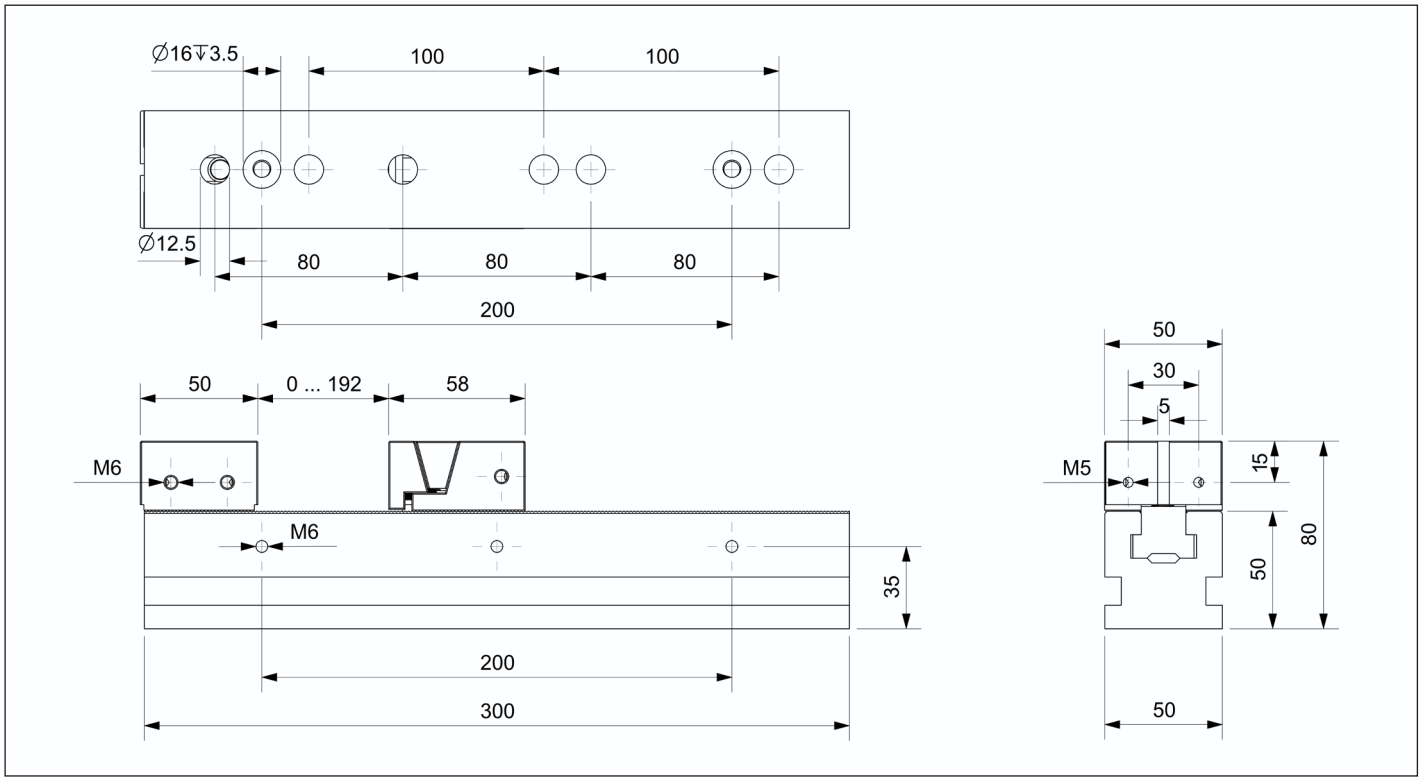

KSD-50-300-**MD TYPE**

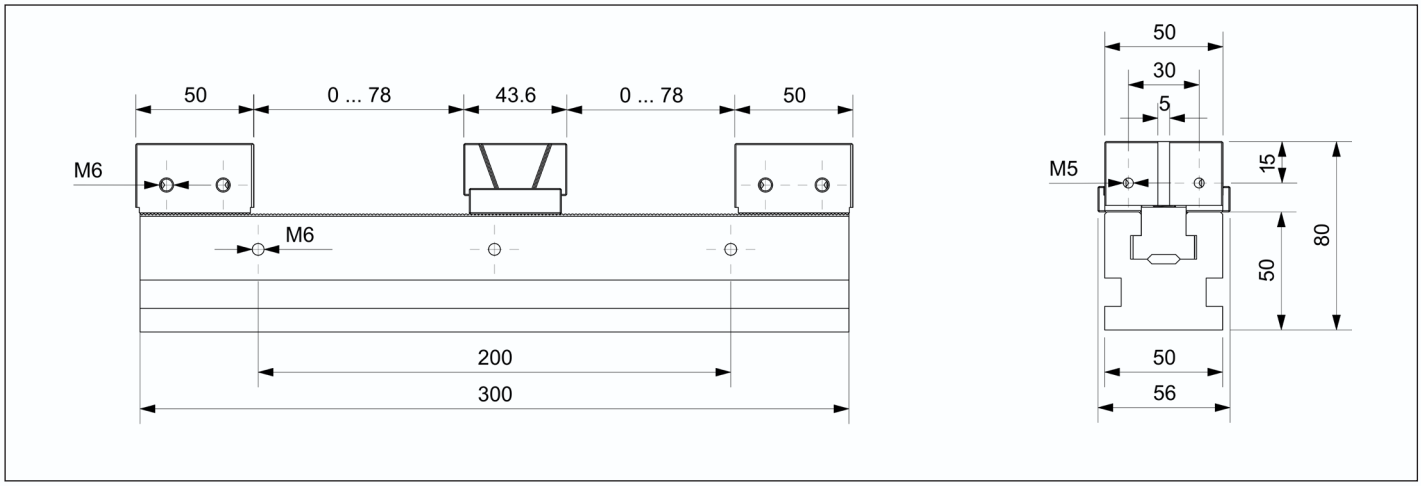

Clamping Rail

Without system jaws

Scope of delivery
Clamping rail inclusive operating manual; without system jaws

Description	ID	Rail width [mm]	Clamping force [kN]	Max. torque [N.m]	Weight [kg]
KSD50-400	21020	50	17.86	30(FD) 60(MD)	5.4

KSD-50-400-**FD TYPE**

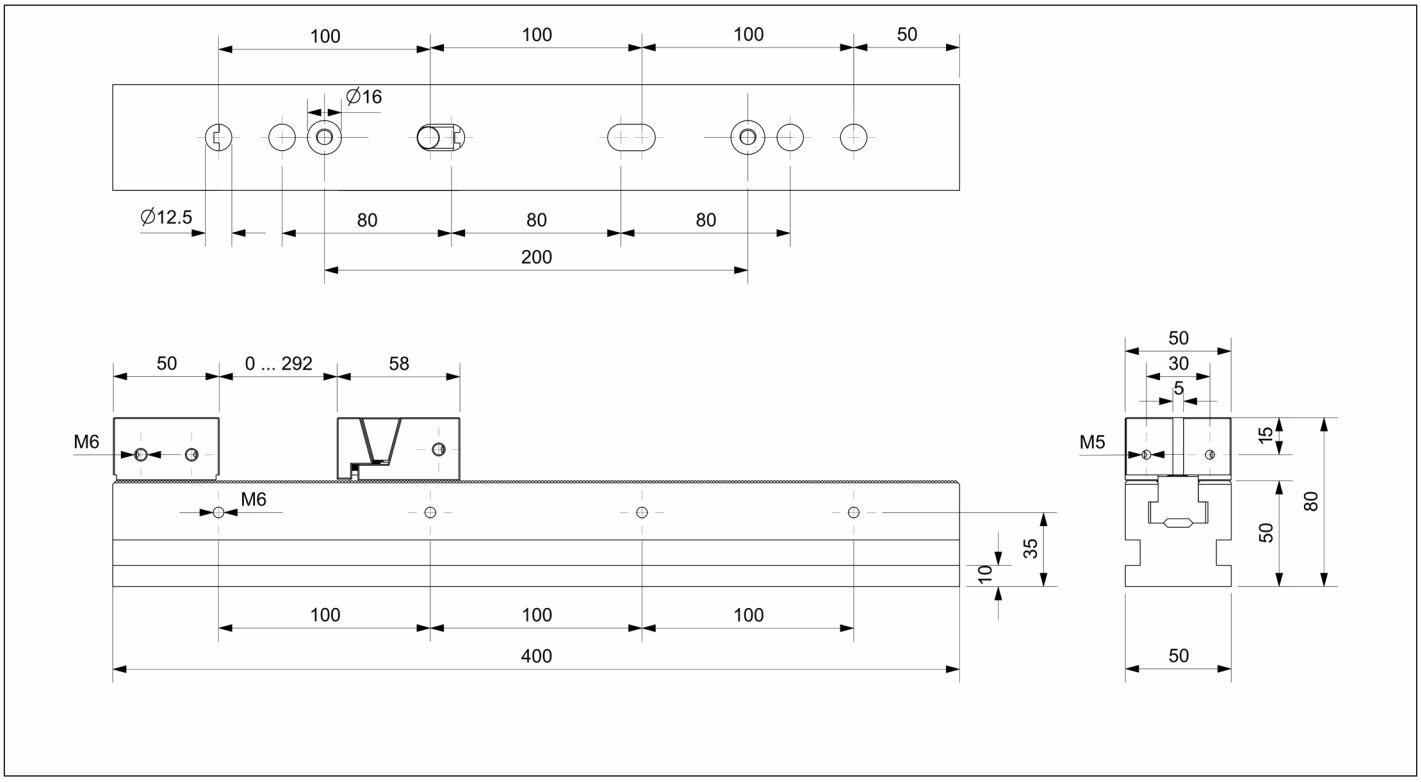

KSD-50-400-**MD TYPE**

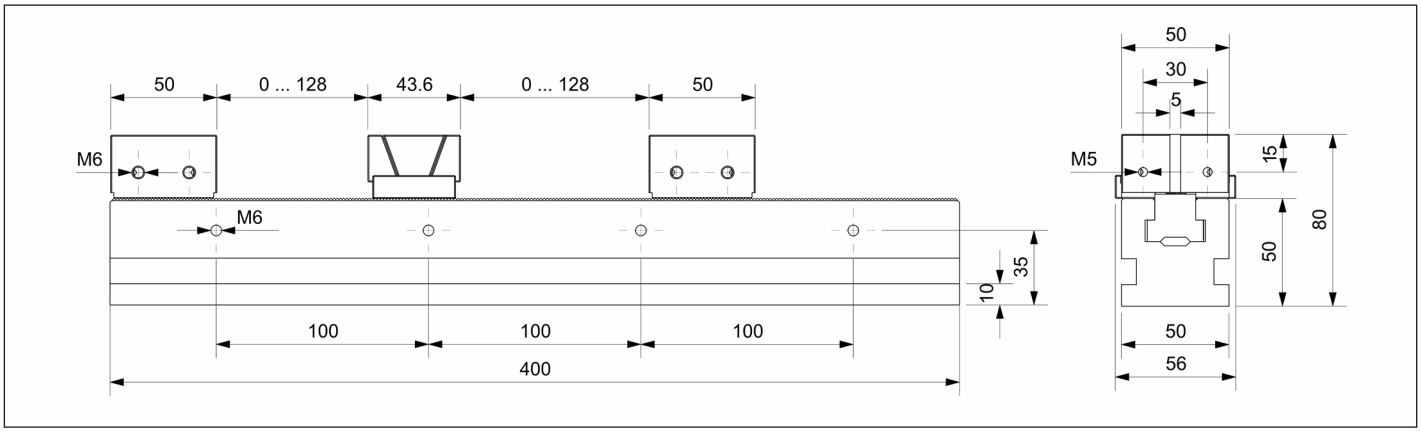

WARWICK®

Clamping Rail
Without system jaws

Scope of delivery
Clamping rail inclusive operating manual; without system jaws

Description	ID	Rail width [mm]	Clamping force [kN]	Max. torque [N.m]	Weight [kg]
KSD50-500	21030	50	17.86	30(FD) 60(MD)	6.7

KSD-50-500-**FD TYPE**

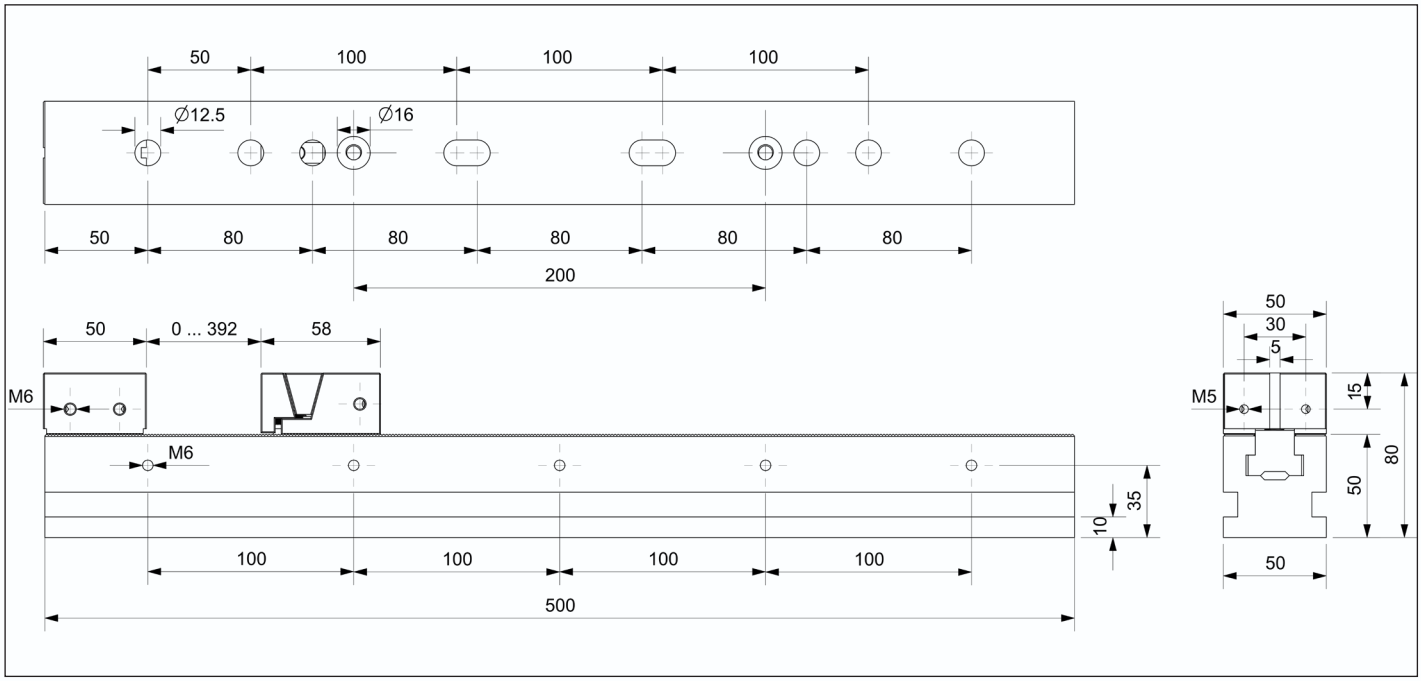

KSD-50-500-**MD TYPE**

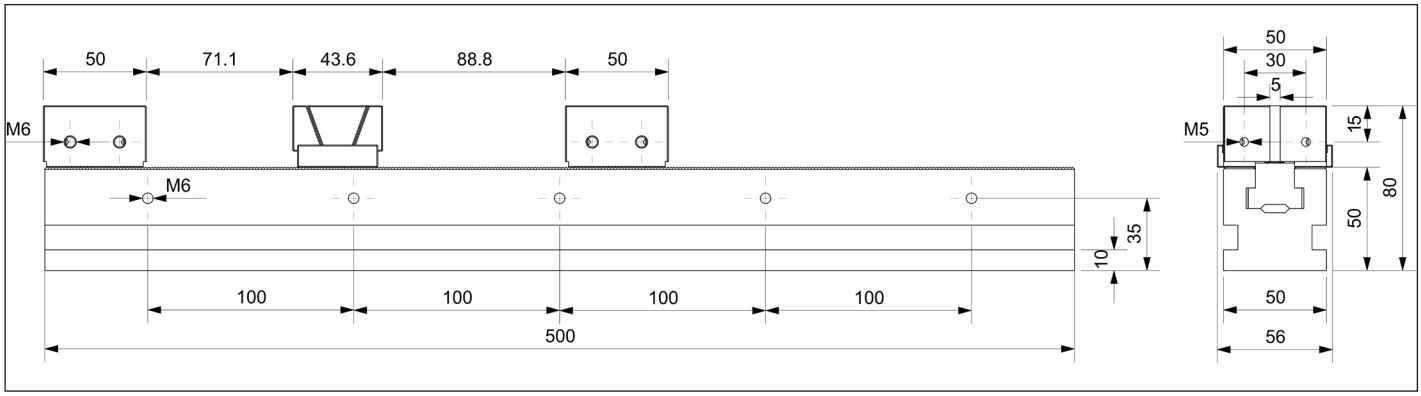

Clamping Rail

Without system jaws

Scope of delivery
Clamping rail inclusive operating manual; without system jaws

Description	ID	Rail width [mm]	Clamping force [kN]	Max. torque [N.m]	Weight [kg]
KSD50-600	21040	50	17.86	30(FD) 60(MD)	8

KSD-50-600-**FD TYPE**

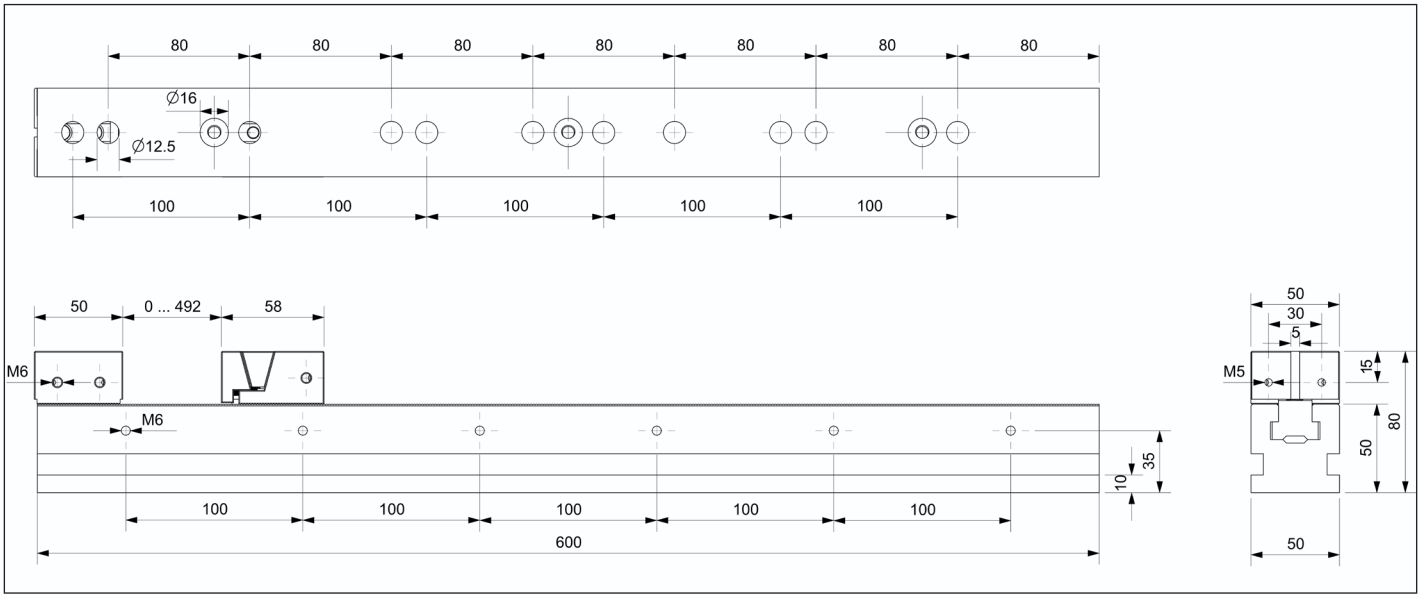

KSD-50-600-**MD TYPE**

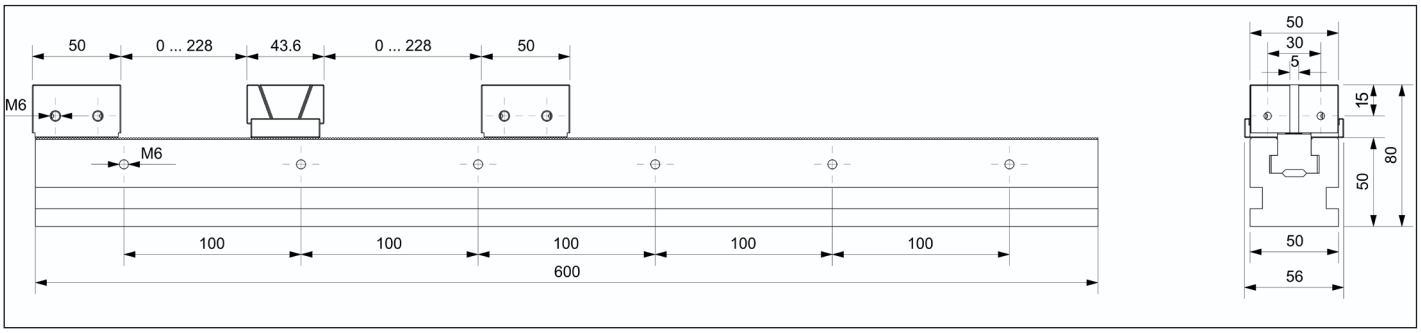

WARWICK®

Clamping Rail

Without system jaws

Scope of delivery
Clamping rail inclusive operating manual; without system jaws

Description	ID	Rail width [mm]	Clamping force [kN]	Max. torque [N.m]	Weight [kg]
KSD50-700	21050	50	17.86	30(FD) 60(MD)	10.8

KSD-50-700-**FD** **TYPE**

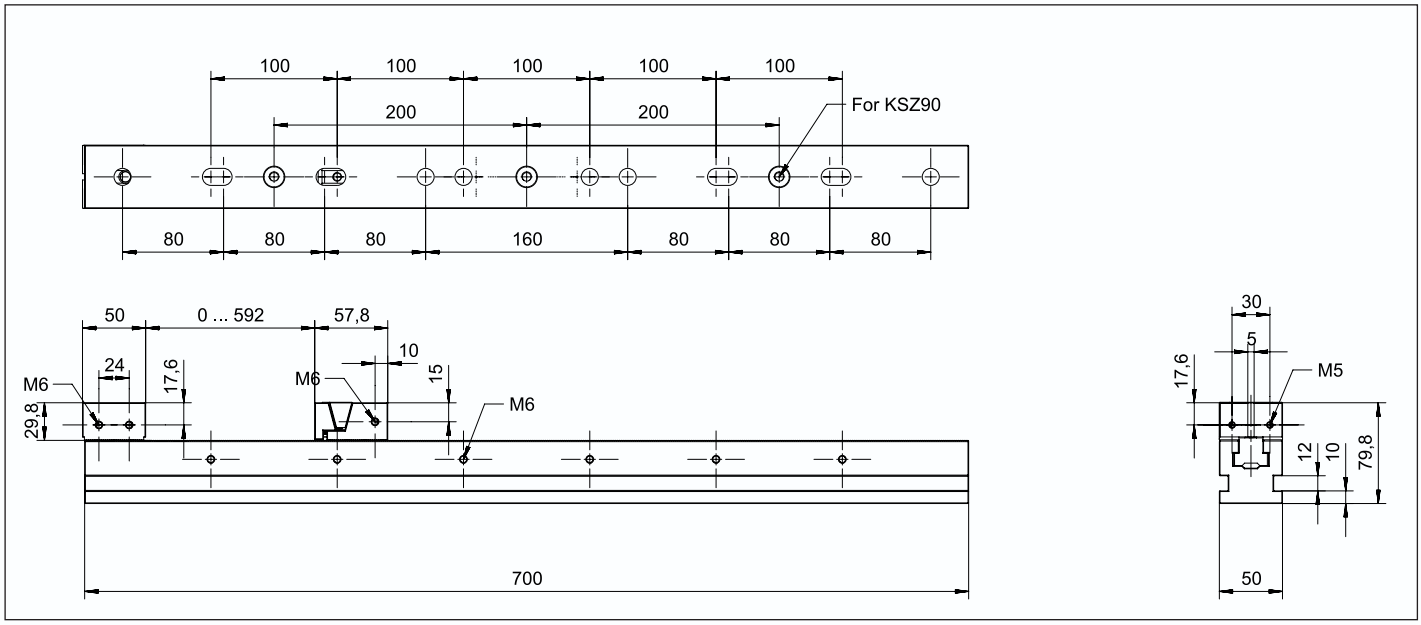

KSD-50-700-**MD** **TYPE**

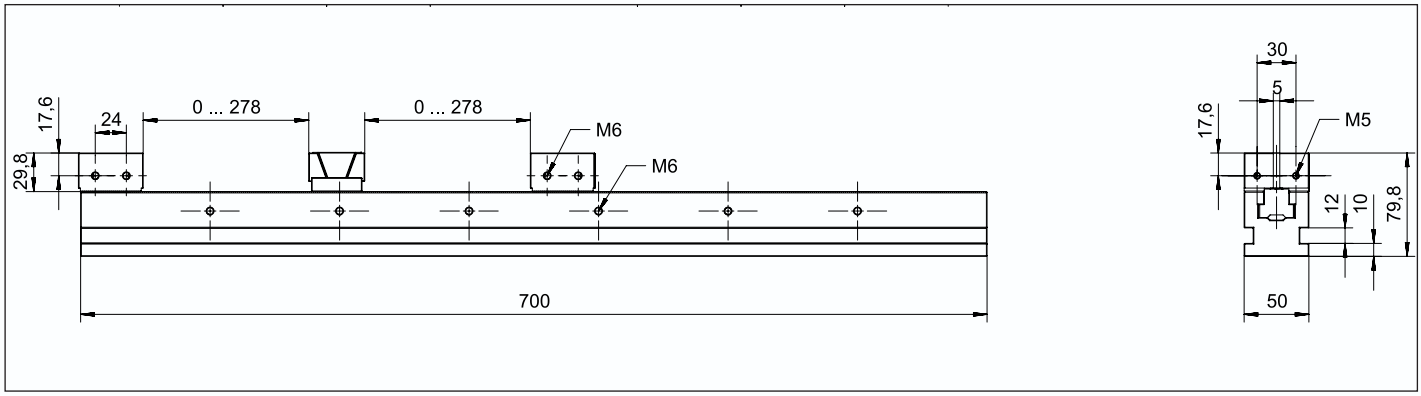

One-way Clamping
Without Clamping Rail

Scope of delivery
One-way Clamping inclusive operating manual; without Clamping Rail

Description	ID	Jaw width [mm]	Clamping force [kN]	Max. torque [N.m]	Weight [kg]
50FD	21100	50	17.86	30	0.8
50FD-T	21101	50	17.86	30	0.8

50FD type unidirectional clamping jaw

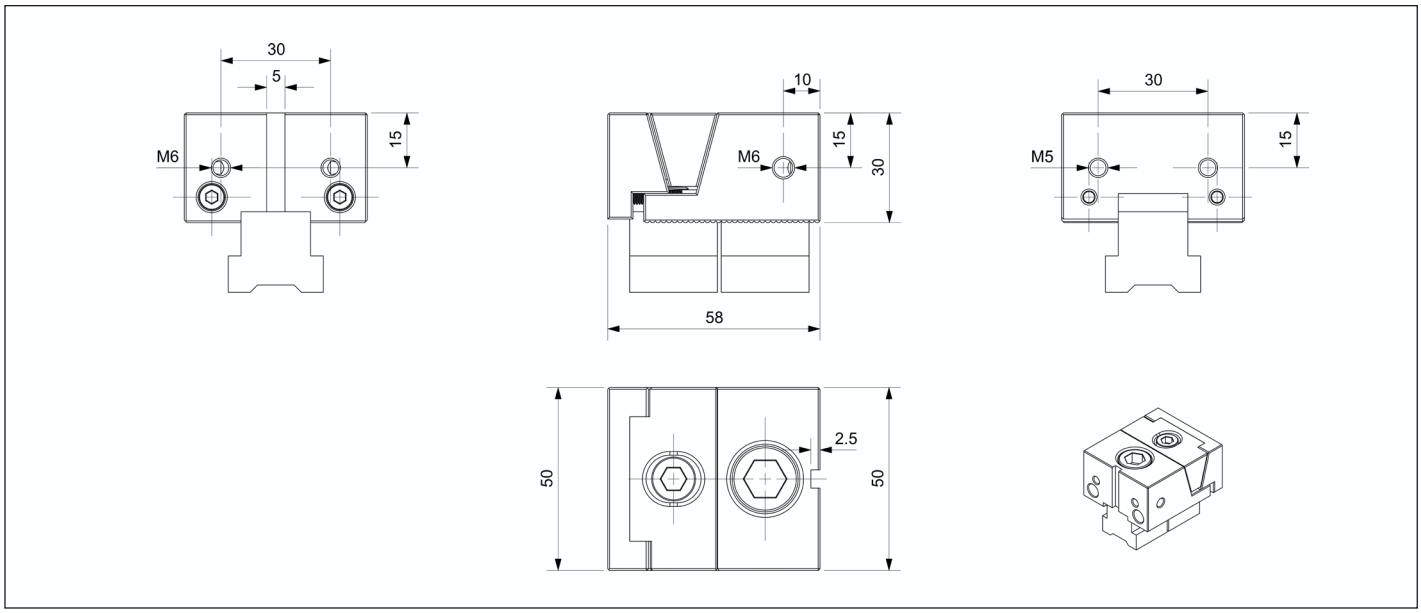

50FD-T Jagged type unidirectional clamping jaw

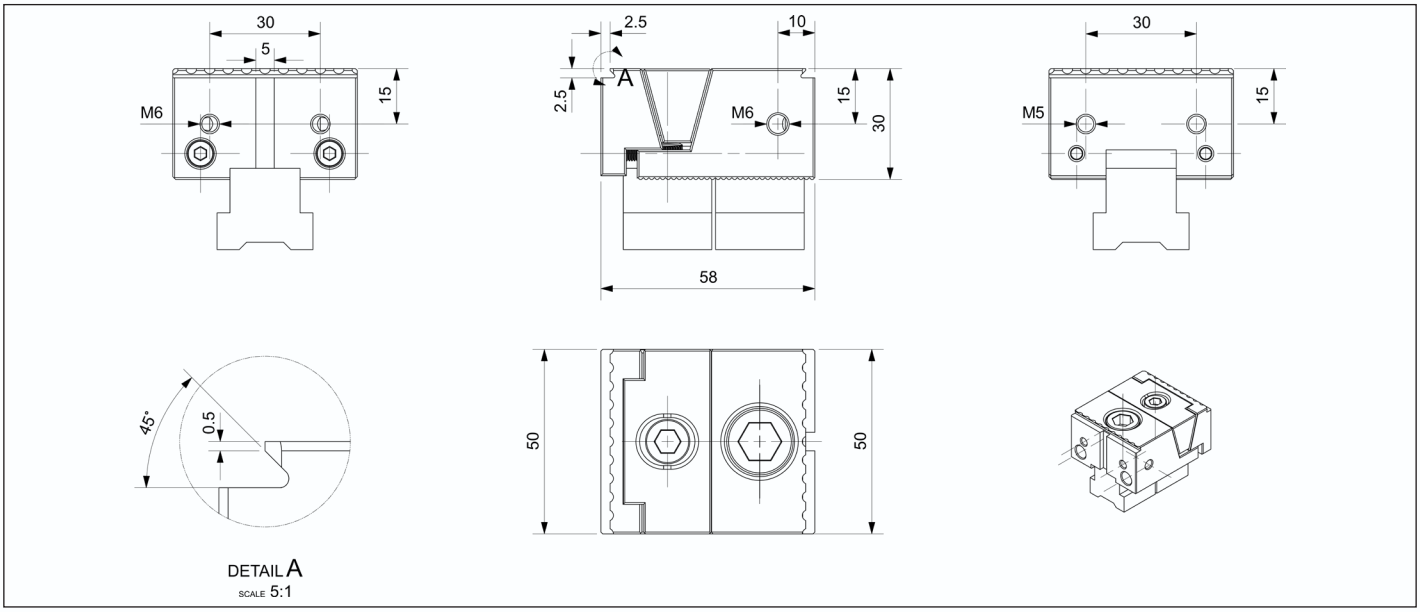

WARWICK®

Two-way Clamping
Without Clamping Rail

Scope of delivery
Two-way Clamping inclusive operating manual; without Clamping Rail

Description	ID	Jaw width [mm]	Clamping force [kN]	Max. torque [N.m]	Weight [kg]
50MD	21110	50	17.86	60	0.6
50MD-T	21111	50	17.86	60	0.6

50MD type Bidirectional Clamping Jaw

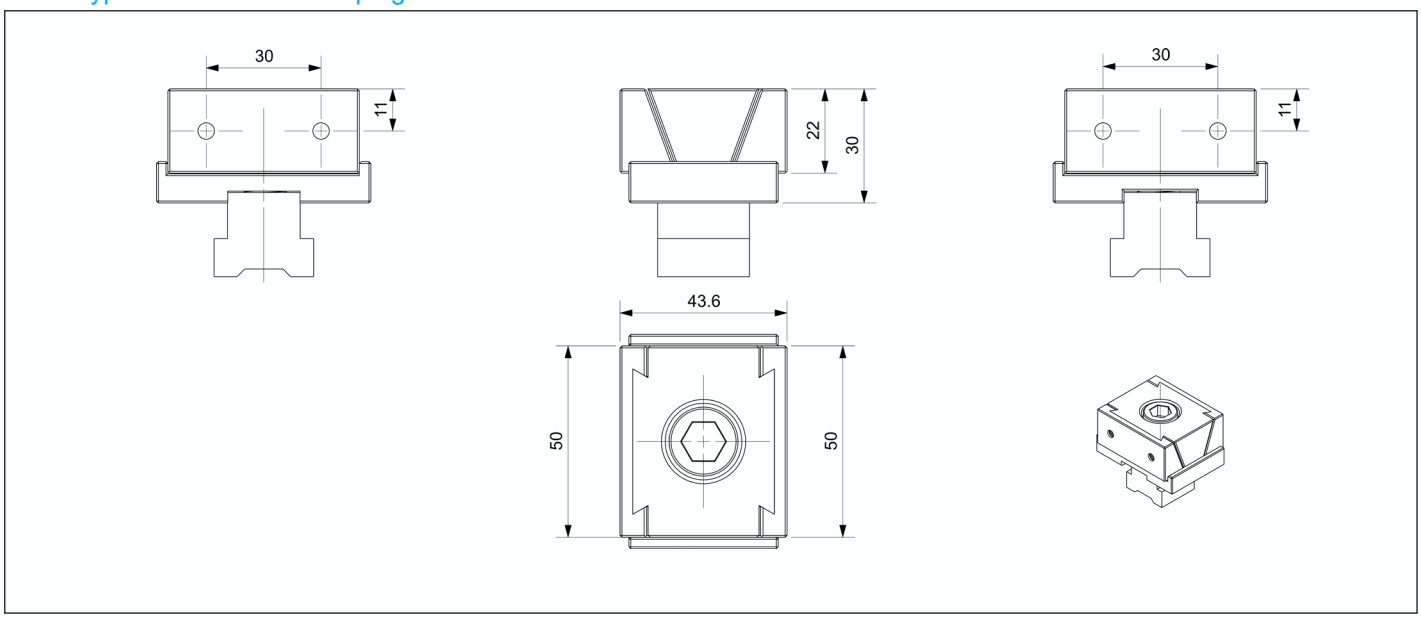

50MD-T Jagged type Bidirectional Clamping Jaw

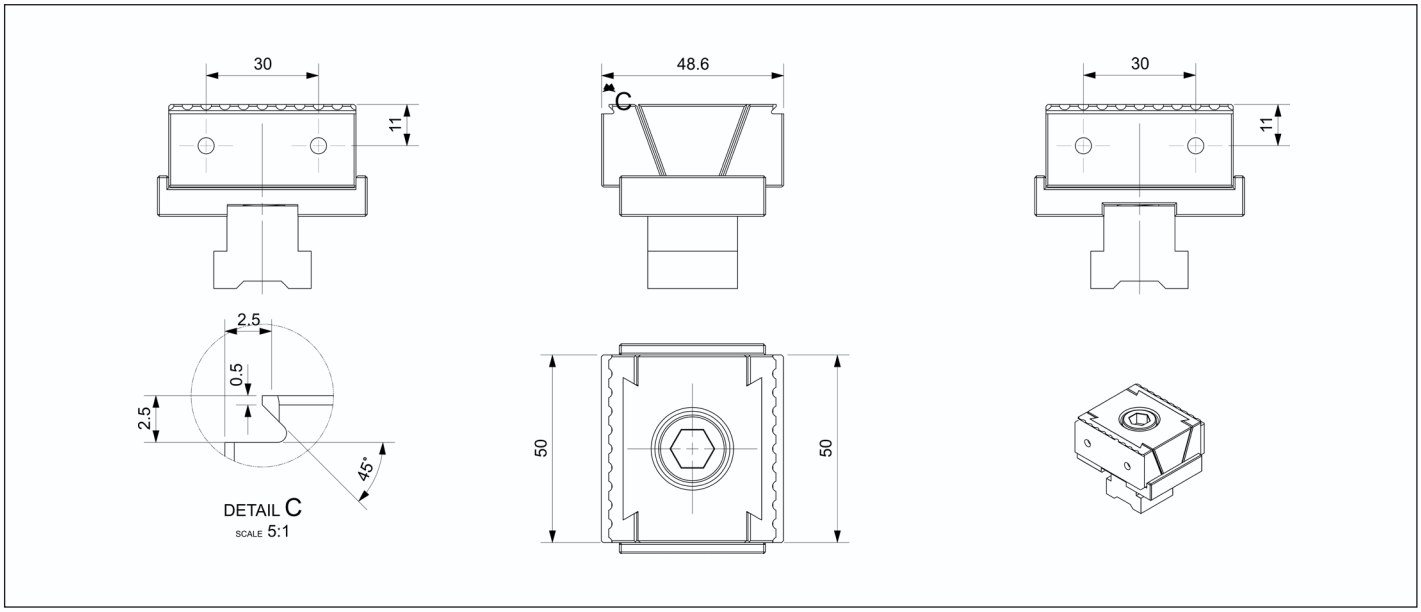

Fixed jaw
Without Clamping Rail

Scope of delivery
Fixed jaw inclusive operating manual; without Clamping Rail

Description	ID	Jaw width [mm]	Clamping force [kN]	Max. torque [N.m]	Weight [kg]
50G	21201	50	-	80	0.65
50G-T	21202	50	-	80	0.65

50G type Stationary clamping jaw

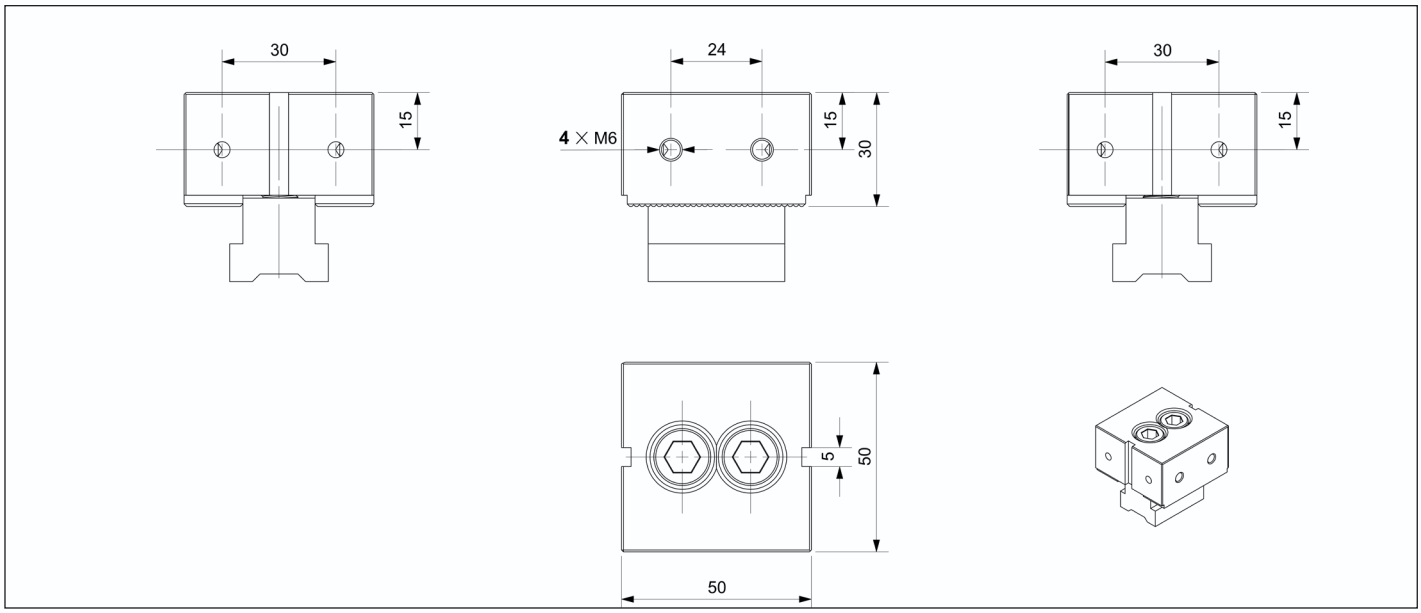

50G-T Serrated Stationary Clamping Jaw

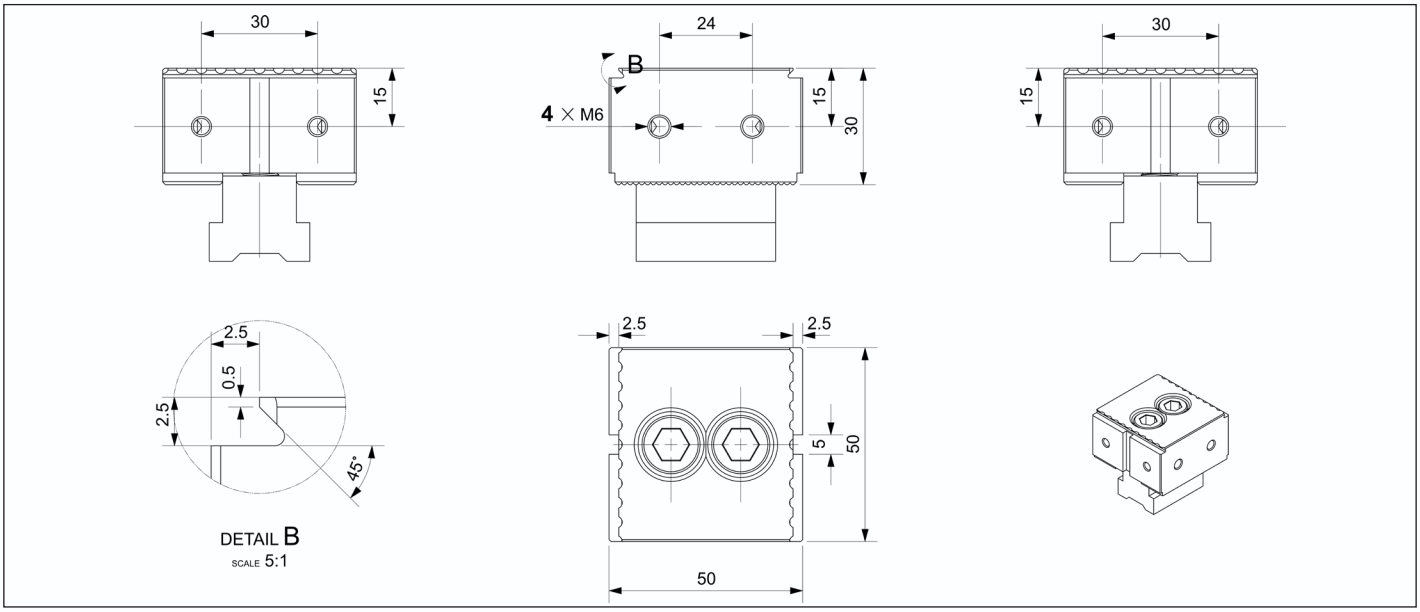

WARWICK®

Fixed jaw
Without Clamping Rail

Scope of delivery
Fixed jaw inclusive operating manual; without Clamping Rail

Description	ID	Jaw width [mm]	Clamping force [kN]	Max. torque [N.m]	Weight [kg]
50SG	21203	50	-	80	0.4
50SG-T	21204	50	-	80	0.4

50SG 固定钳口 |

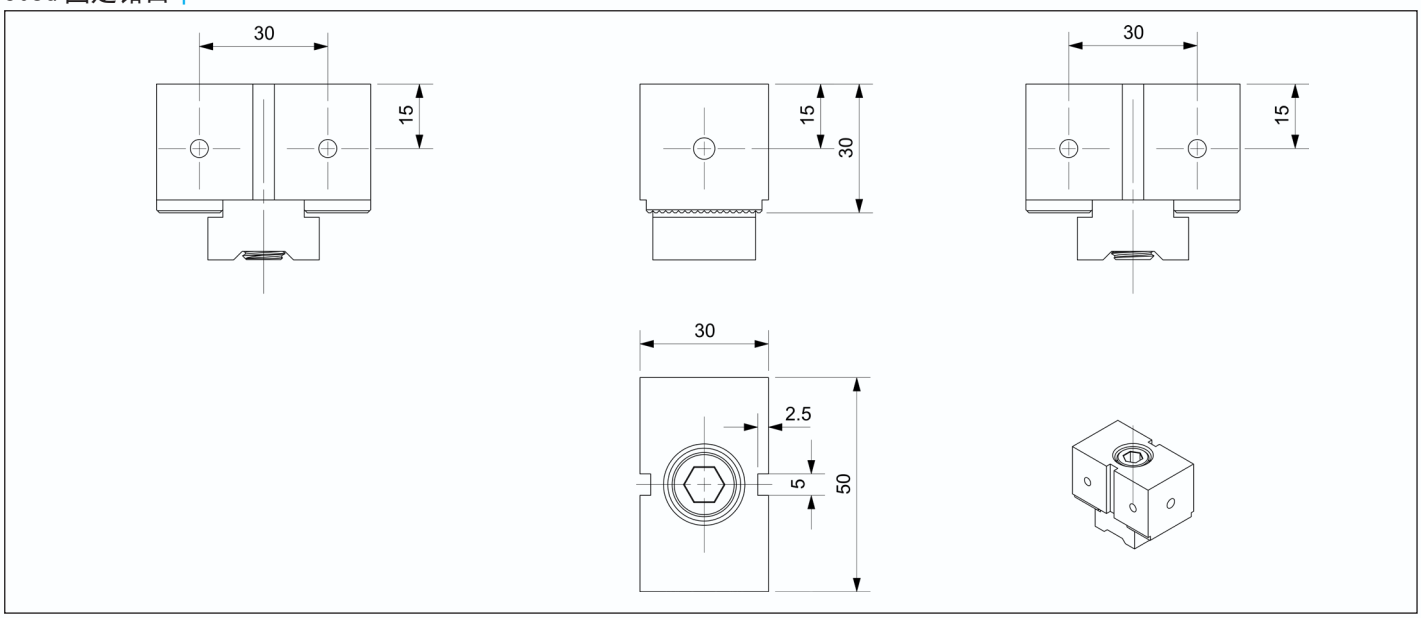

50SG-T 锯齿型固定钳口 |50SG-T

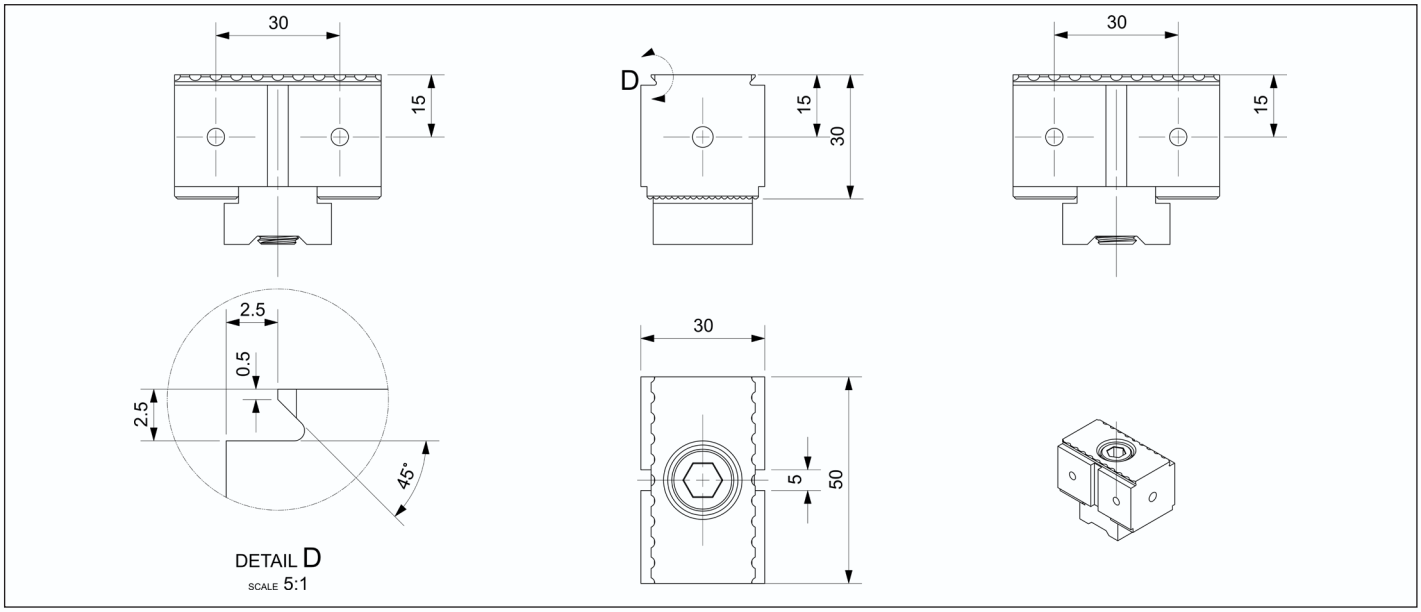

Soft claw

Customizable production

Material: S45C, hardenable | Aluminum 6061
Version: Fastening bores for screw DIN EN ISO 4762
Mounting: Via tongue and groove

Description	ID	Jaw width [mm]	Clamping range [mm]	Weight [kg]
50RZ-V	21211	50	MAX Φ70	0.2

50RZ-V 型软爪 | 50RZ-V type clamping jaw

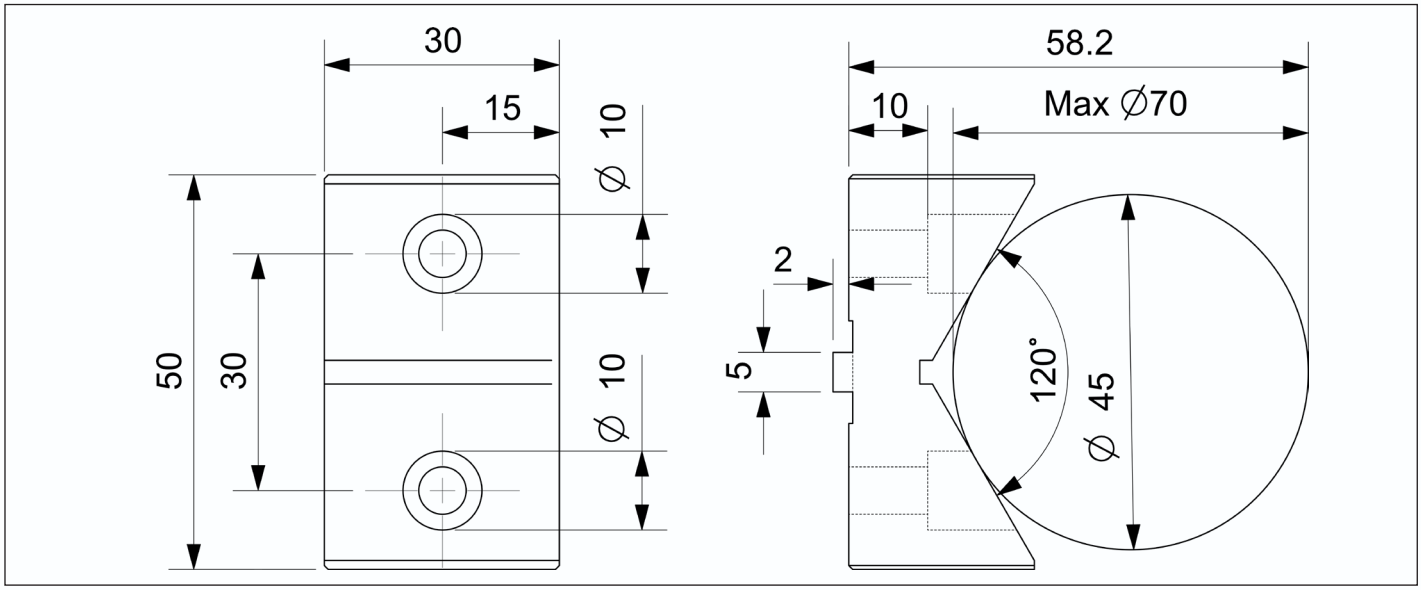

Description	ID	Jaw width A [mm]	Jaw high B [mm]	Weight [kg]
50RZ-B17FD-B	21212-FD	50	17	0.2
50RZ-B27FD-B	21213-FD	80	27	0.5
50RZ-B17MD-B	21212-MD	50	17	0.2
50RZ-B27MD-B	21213-MD	80	27	0.5

50RZ-B type soft jaw

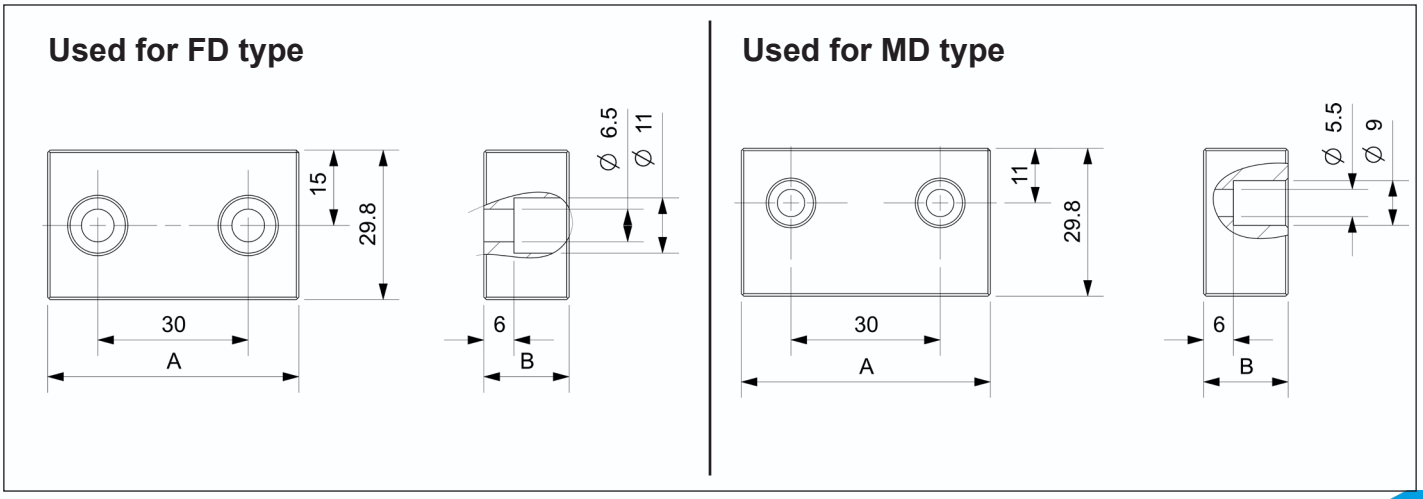

WARWICK®

Soft claw

Customizable production

Material: S45C, hardenable | Aluminum 6061
Version: Fastening bores for screw DIN EN ISO 4762
Mounting: Via tongue and groove

Description	ID	Jaw width A [mm]	Jaw high B [mm]	Weight [kg]
50RZ-B17-A	21214	50	17	0.3
50RZ-B27-A	21215	80	27	0.5

50RZ-A 型软爪 | 50RZ-A type soft jaw

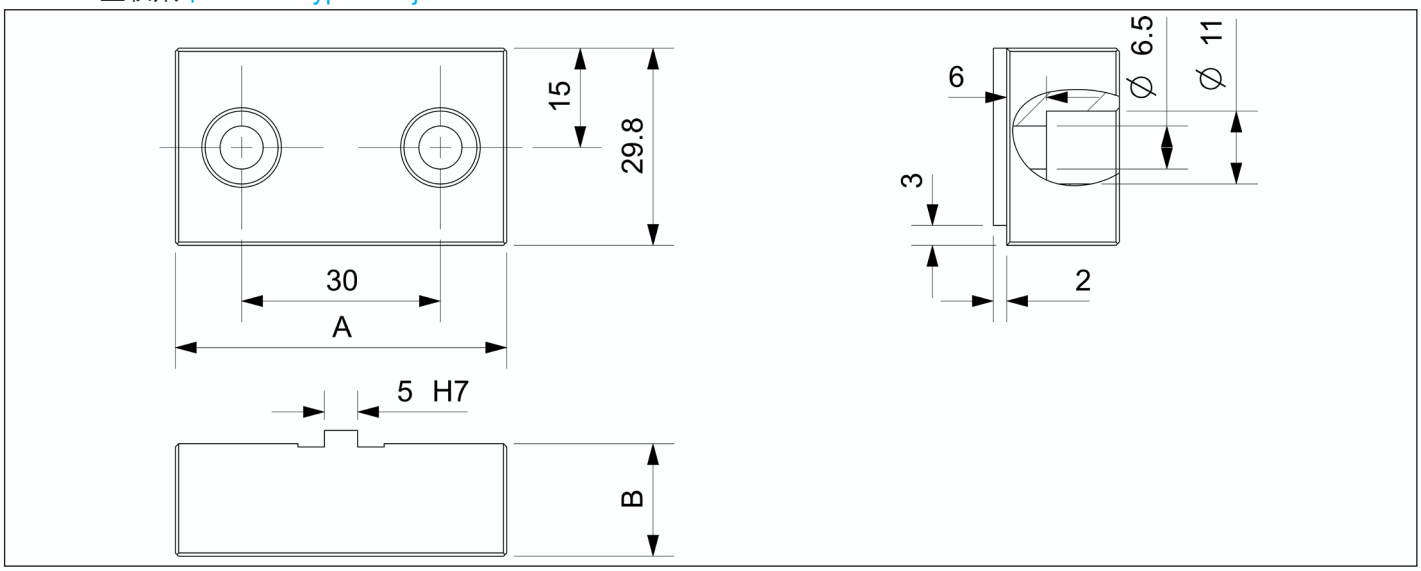

Description	ID	Jaw width A [mm]	Jaw high B [mm]	Weight [kg]
50RZ-B21-C	21216	50	21	0.4
50RZ-B34-C	21217	80	34	0.8

50RZ-C type soft jaw

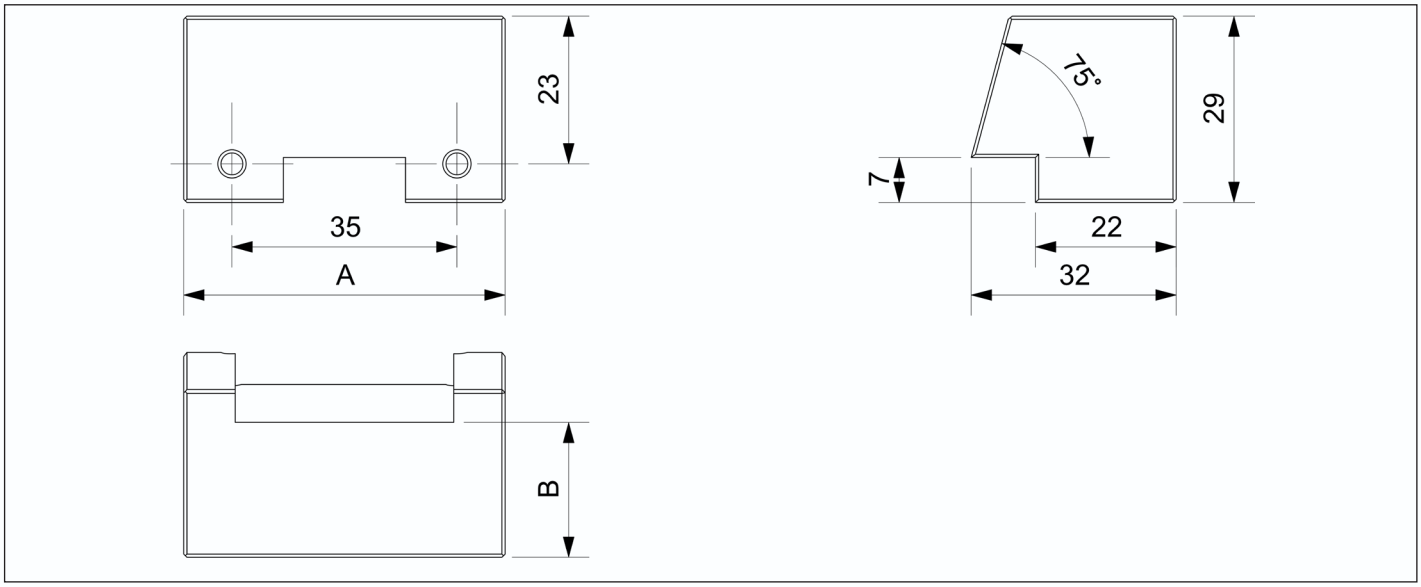

Parallel gasket
Customizable production

Material: 4140, HRC54-58
Version: Fastening bores for screw DIN EN ISO 4762 Mounting: Installation through mounting holes

Description	ID	Jaw width A [mm]	Jaw high B [mm]	Jaw high C [mm]	Weight [kg]
50DP-522	21221	50	5	22	0.05
50DP-525	21222	50	5	25	0.06
50DP-527	21223	50	5	27	0.07

0DP Parallel gasket

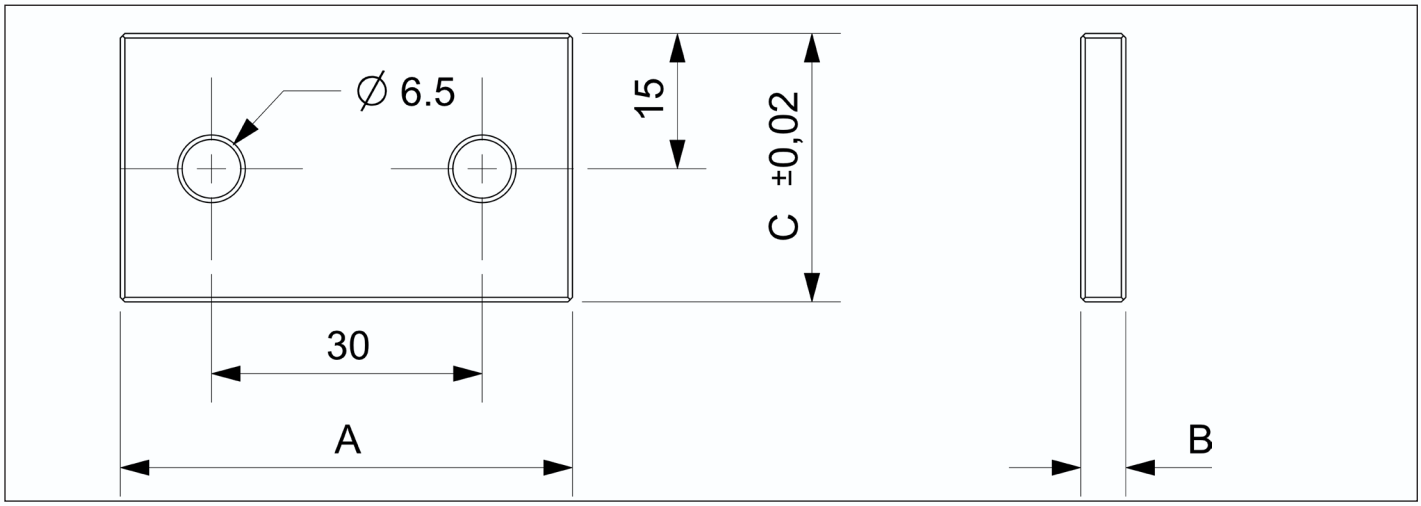

50DW work positioner

Instructions for use
Determine the position of the workpiece

Description	ID	Weight [kg]
50DW	21225	0.2

50DW work positioner

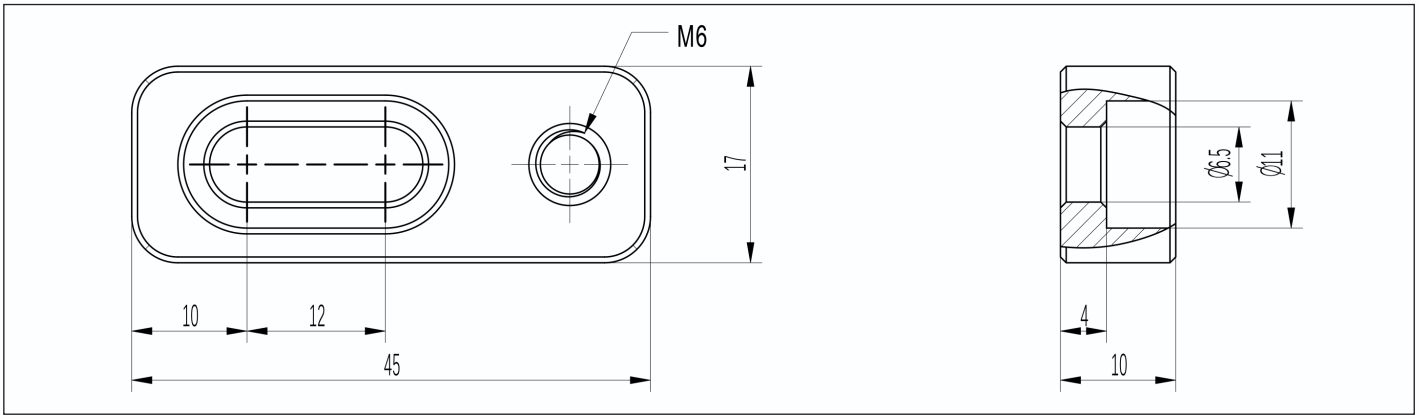

Customizable production

Material:
Version: Fastening bores for screw DIN EN ISO 4762
Mounting: Via tongue and groove

Description	ID	Jaw width A [mm]	Jaw high B [mm]	Weight [kg]
50G-MT	21250	50	50	1.3

50G-MT 齿型固定钳口 | 50G-MT

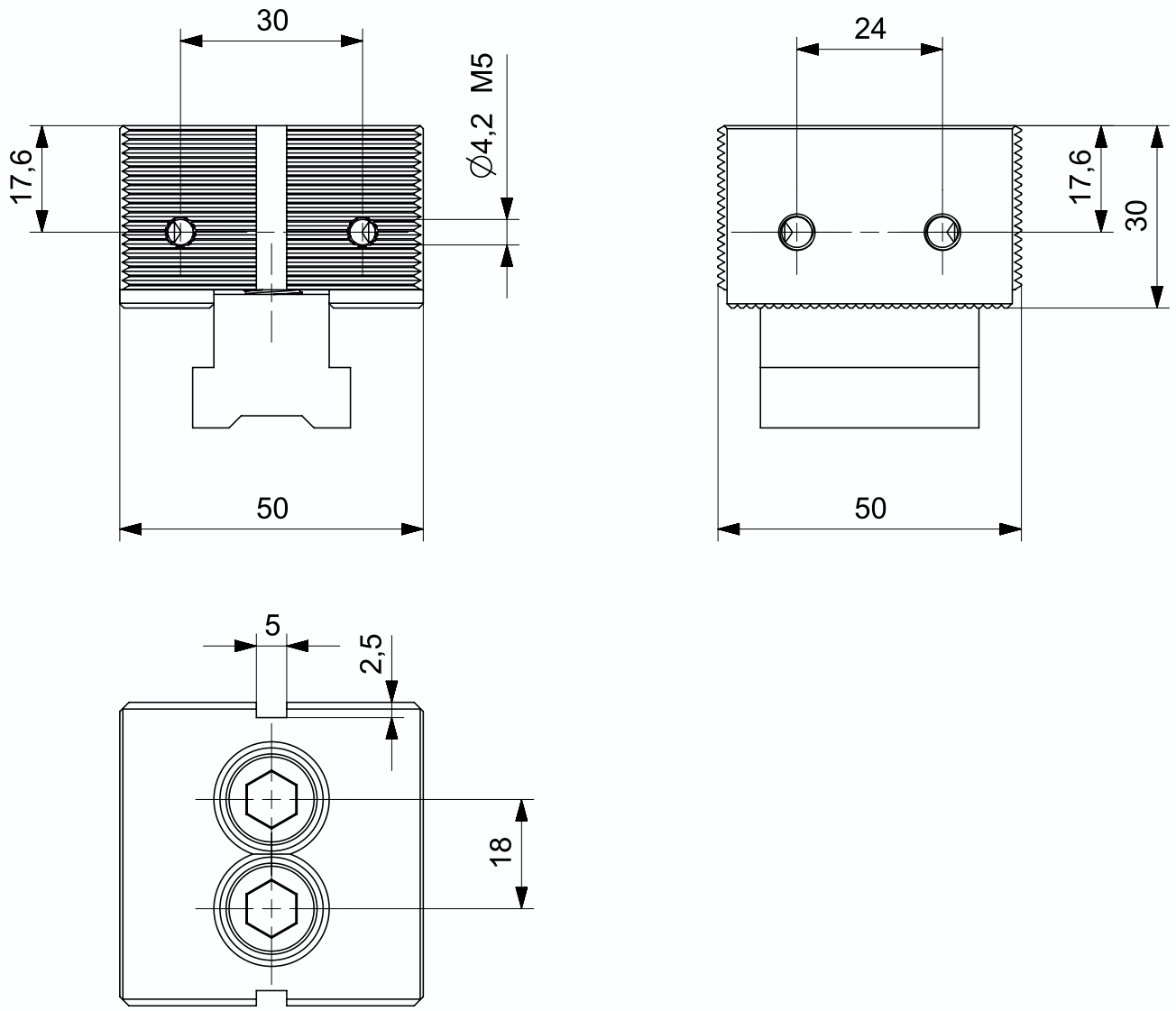

Serrated Jaw

Customizable production

Material: 4140, HRC48-52
Version: Fastening bores for screw DIN EN ISO 4762 Mounting: Installation through mounting holes

Description	ID	Jaw width A [mm]	Jaw high B [mm]	Jaw high C [mm]	Weight [kg]
50C-5010	21260	50	10	30	0.3
50C-5013	21262	50	13	32	0.5
50C-7520	21264	75	20	35	0.8

50C Serrated Jaw

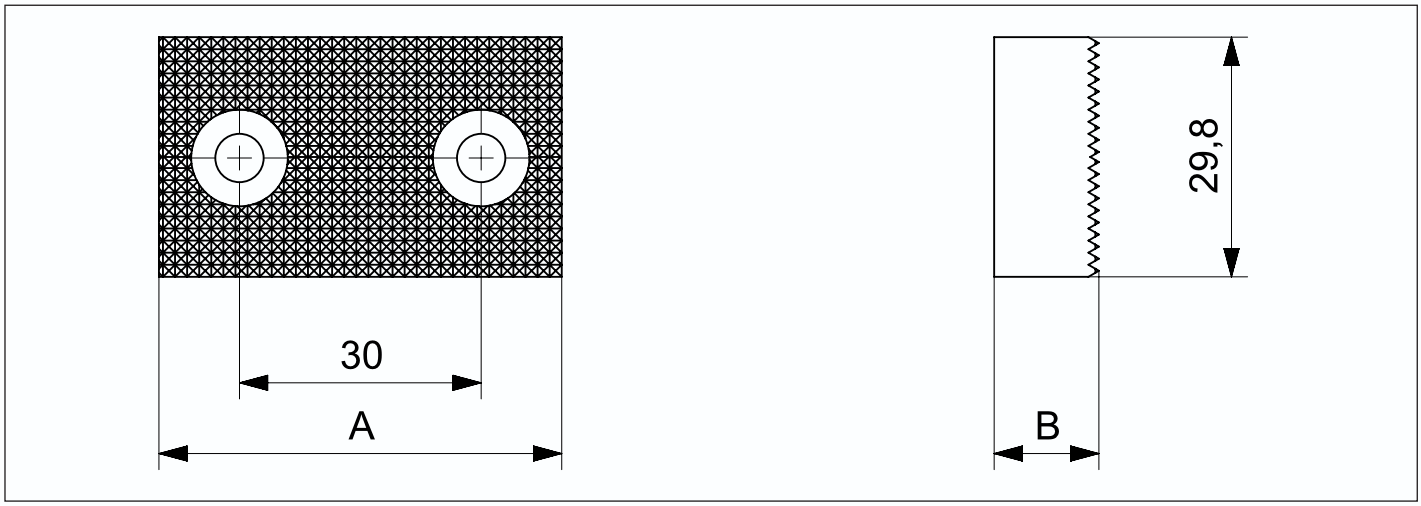

Description	ID	Jaw width A [mm]	Jaw high B [mm]	Jaw high C [mm]	Jaw high D [mm]	Weight [kg]
50C-5010T	21261	50	10	30	5	0.3
50C-5013T	21263	50	13	32	5	0.5
50C-7520T	21265	75	20	35	5	0.8

50C Serrated Step Jaw

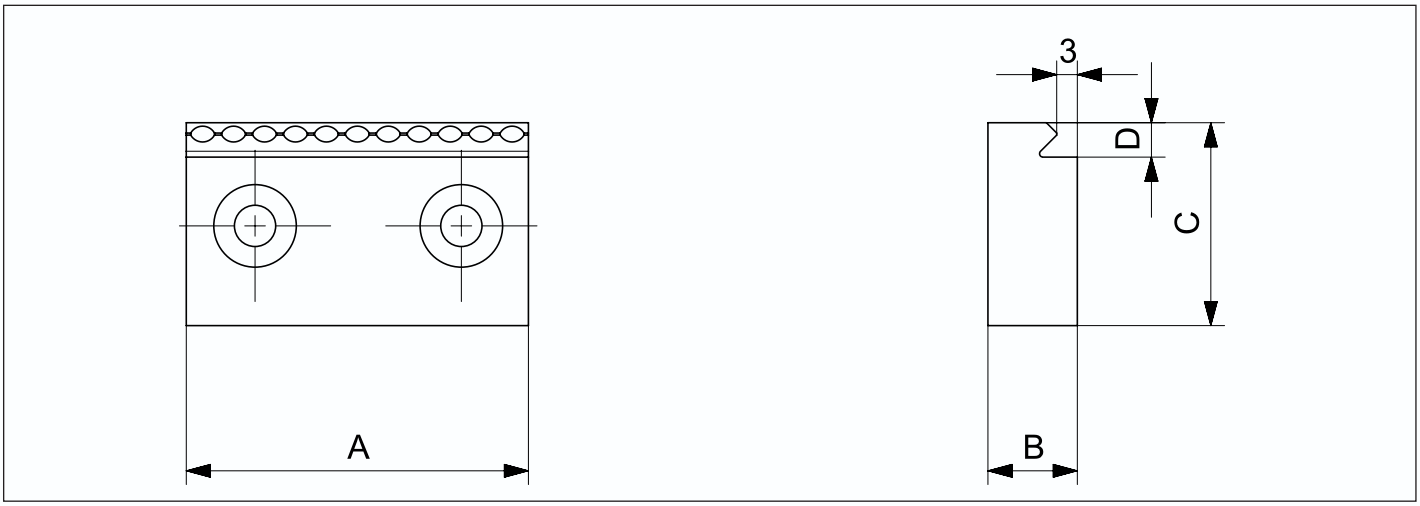

Clamping Capacity

The clamping range shows the max.
The maximum size of the workpiece that can be clamped-depends on the length of the guide rail and the number of clamping areas.

Description		Number of workpieces clamped								
		1	2	3	4	5	6	7	8	9
KSD88-400	Maximum workpiece clamping size	267	92	33						
KSD88-500		367	142	67	29					
KSD88-600		467	192	100	54	27				
KSD88-650		517	217	117	67	37	17			
KSD88-700		567	242	133	79	47	25	10		

FD TYPE Adjustable jaws with Parallel plane

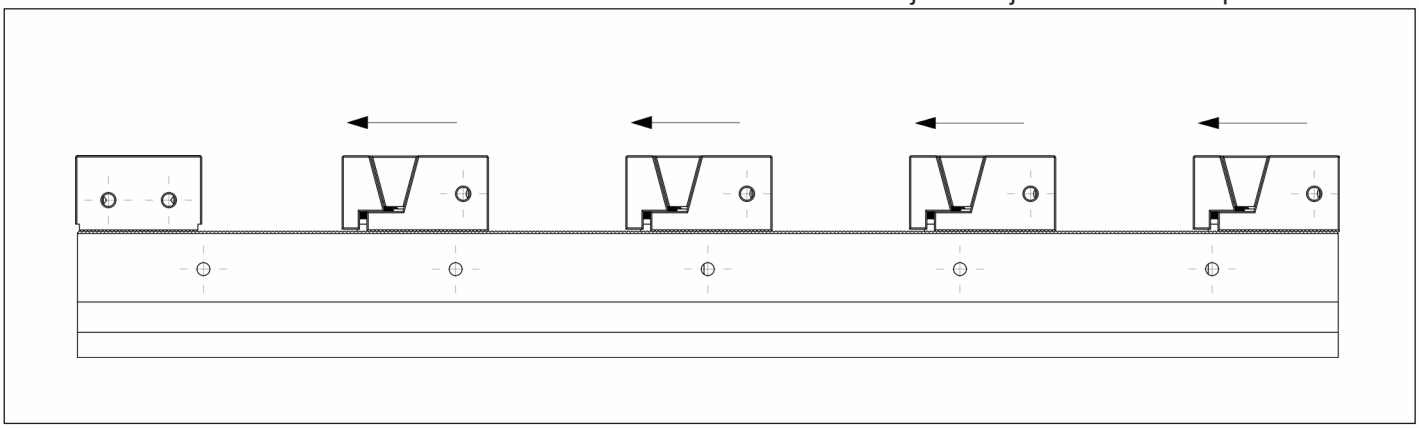

Description		Number of workpieces clamped								
		1	2	3	4	5	6	7	8	9
KSD88-400	Maximum workpiece clamping size	272	97	38	9.5					
KSD88-500		372	147	72	34	12				
KSD88-600		472	197	105	59	32	13			
KSD88-650		522	222	122	72	42	22	7		8
KSD88-700		572	247	138	84	52	30	15		13

FD-T TYPE Adjustable jaws with Toothed steps

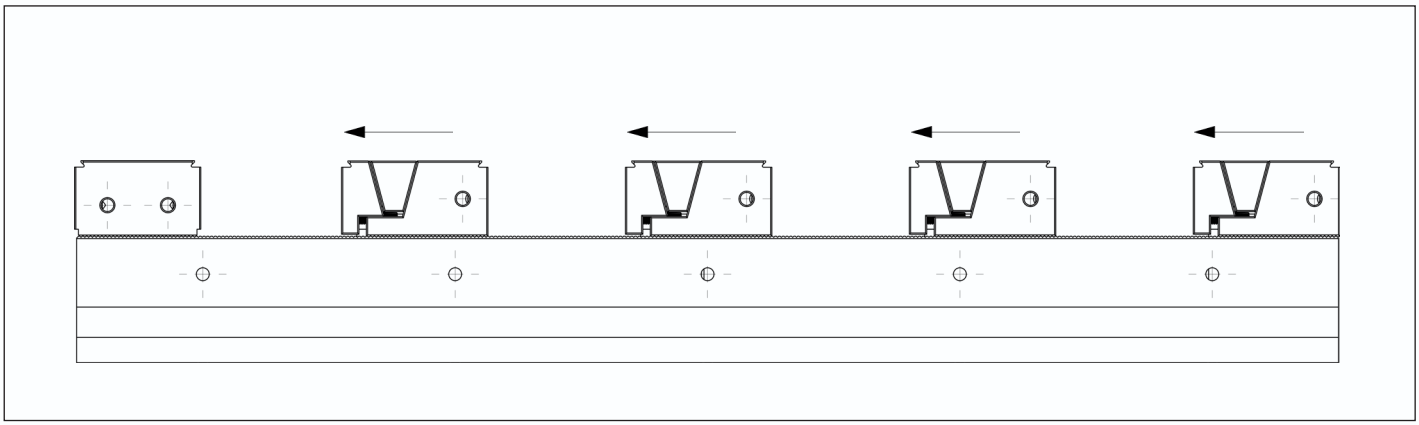

Clamping Capacity

The clamping range shows the max.
The maximum size of the workpiece that can be clamped-depends on the length of the guide rail and the number of clamping areas.

Description		Number of workpieces clamped						
		2	4	6	8	10	12	14
KSD88-400	Maximum workpiece clamping size	113	26					
KSD88-500		163	51	14				
KSD88-600		213	76	30	10			
KSD88-650		238	88	38	18			
KSD88-700		263	101	47	27	5		

MD TYPE With wedge clamping jaws

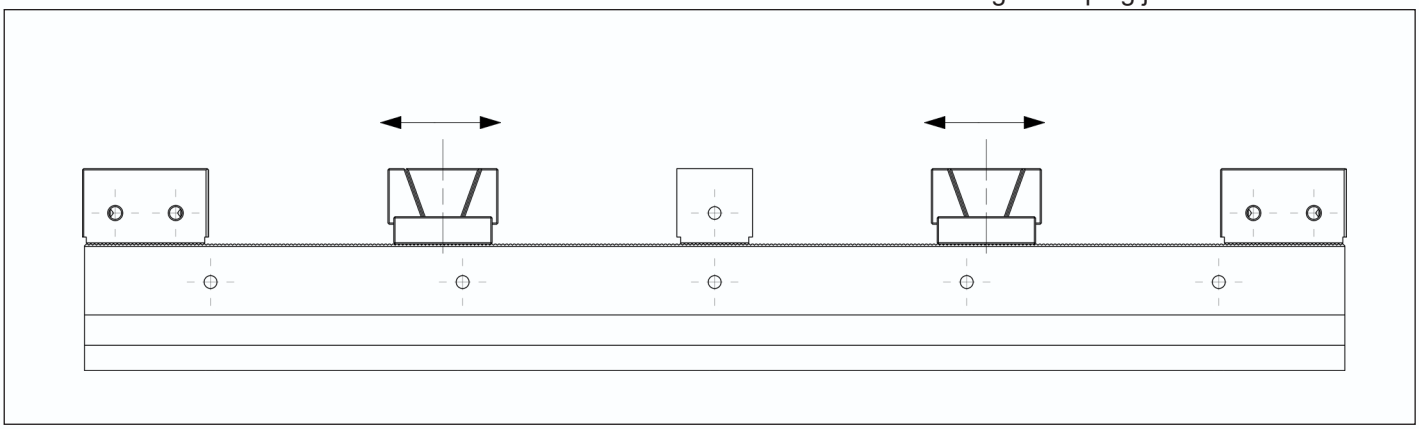

Description		Number of workpieces clamped						
		2	4	6	8	10	12	14
KSD88-400	Maximum workpiece clamping size	118	31					
KSD88-500		168	56	19				
KSD88-600		218	81	35	15			
KSD88-650		243	93	43	23			
KSD88-700		268	106	52	32	10		

MD-T TYPE With Stepped wedge clamping jaws

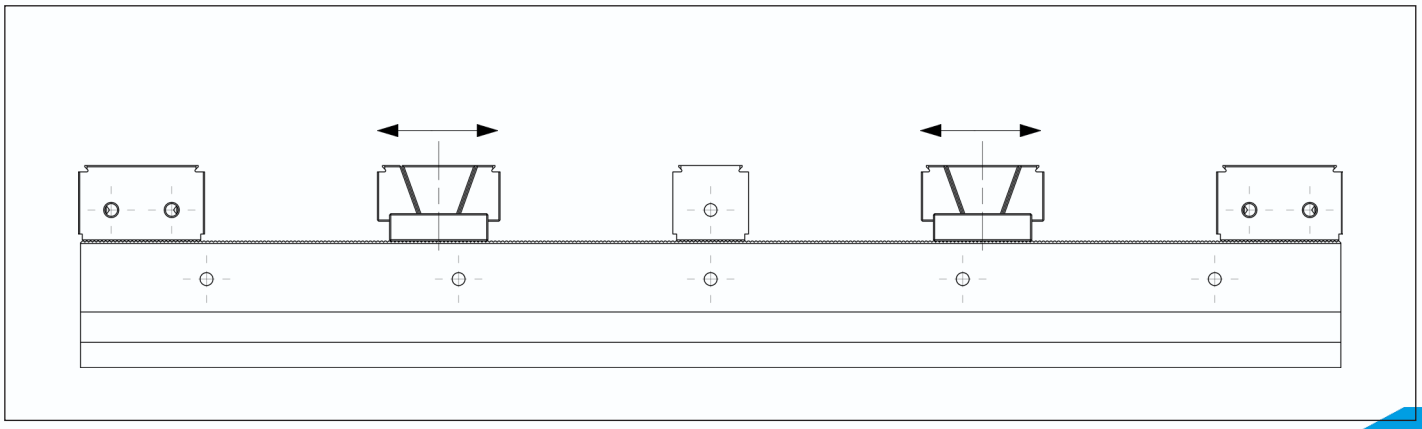

Clamping Rail

Without system jaws

Scope of delivery
Clamping rail inclusive operating manual; without system jaws

Description	ID	Rail width [mm]	夹紧力 Clamping force [kN]	最高扭力 Max. torque [N.m]	重量 Weight [kg]
KSD88-400	21510	88	35.6	80(FD)	14

KSD-88-400-**FD TYPE**

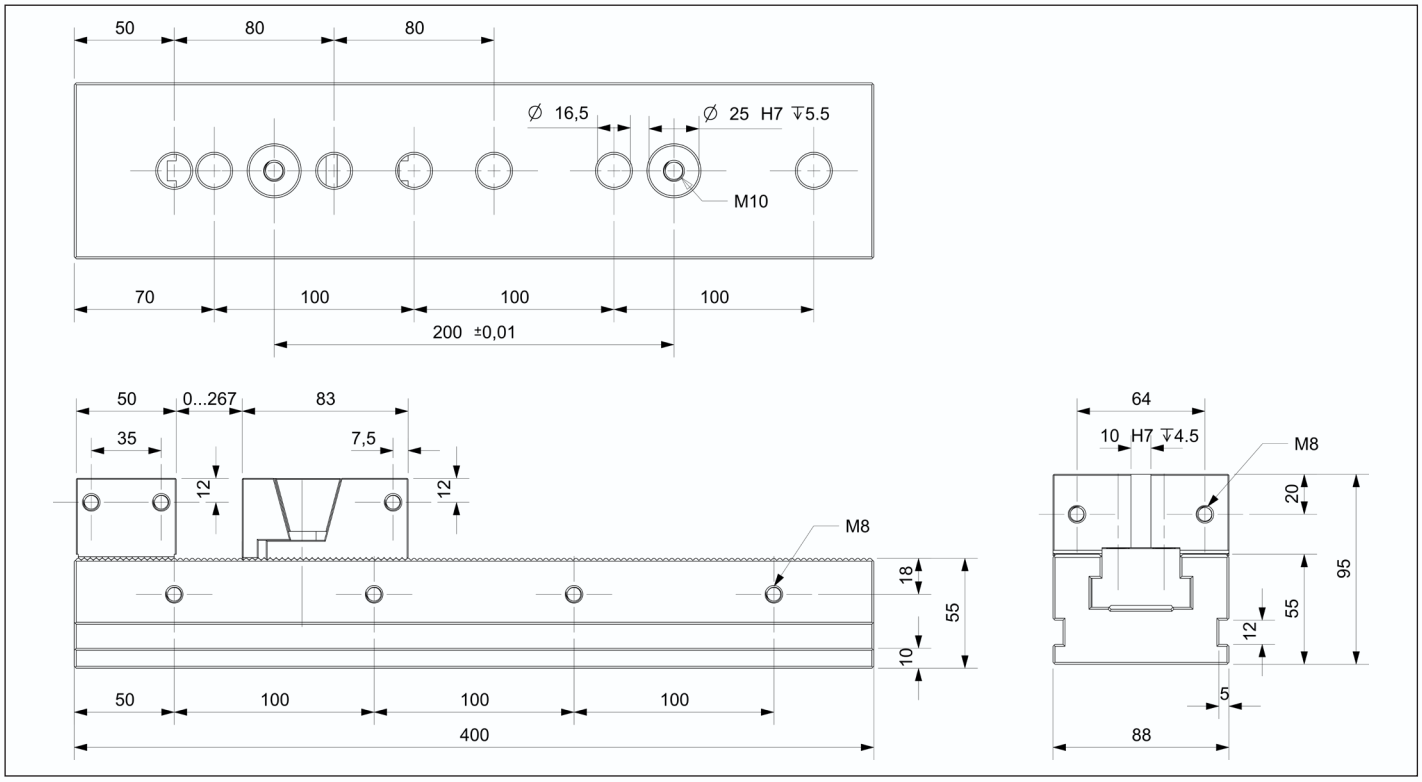

KSD-88-400-**MD TYPE**

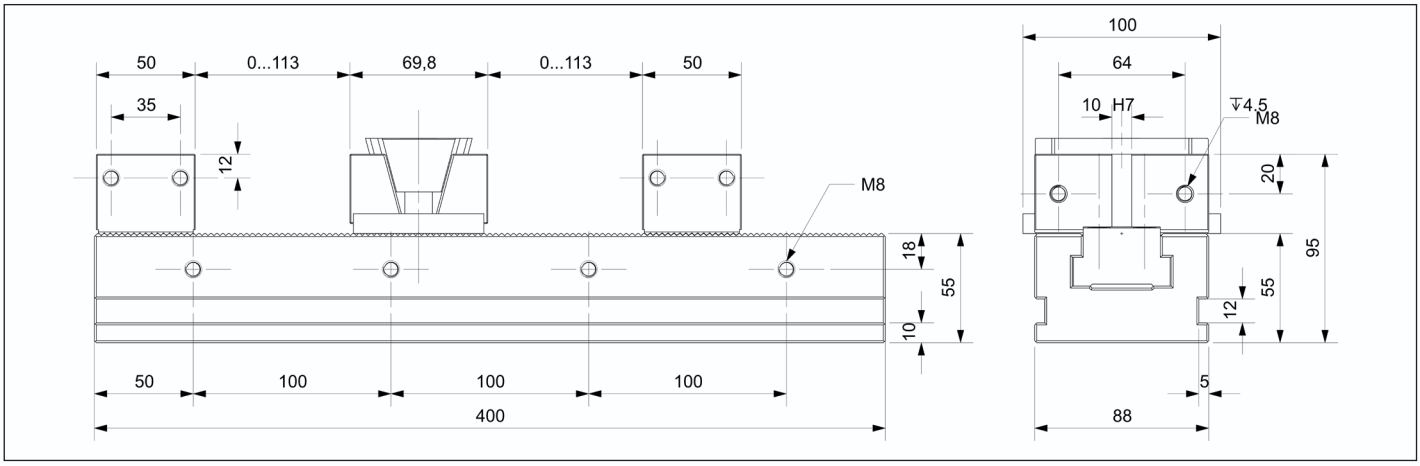

Clamping Rail
Without system jaws

Scope of delivery
Clamping rail inclusive operating manual; without system jaws

Description	ID	Rail width [mm]	Clamping force [kN]	Max. torque [N.m]	Weight [kg]
KSD88-500	21520	88	35.6	80(FD)	17

KSD-88-500-**FD TYPE**

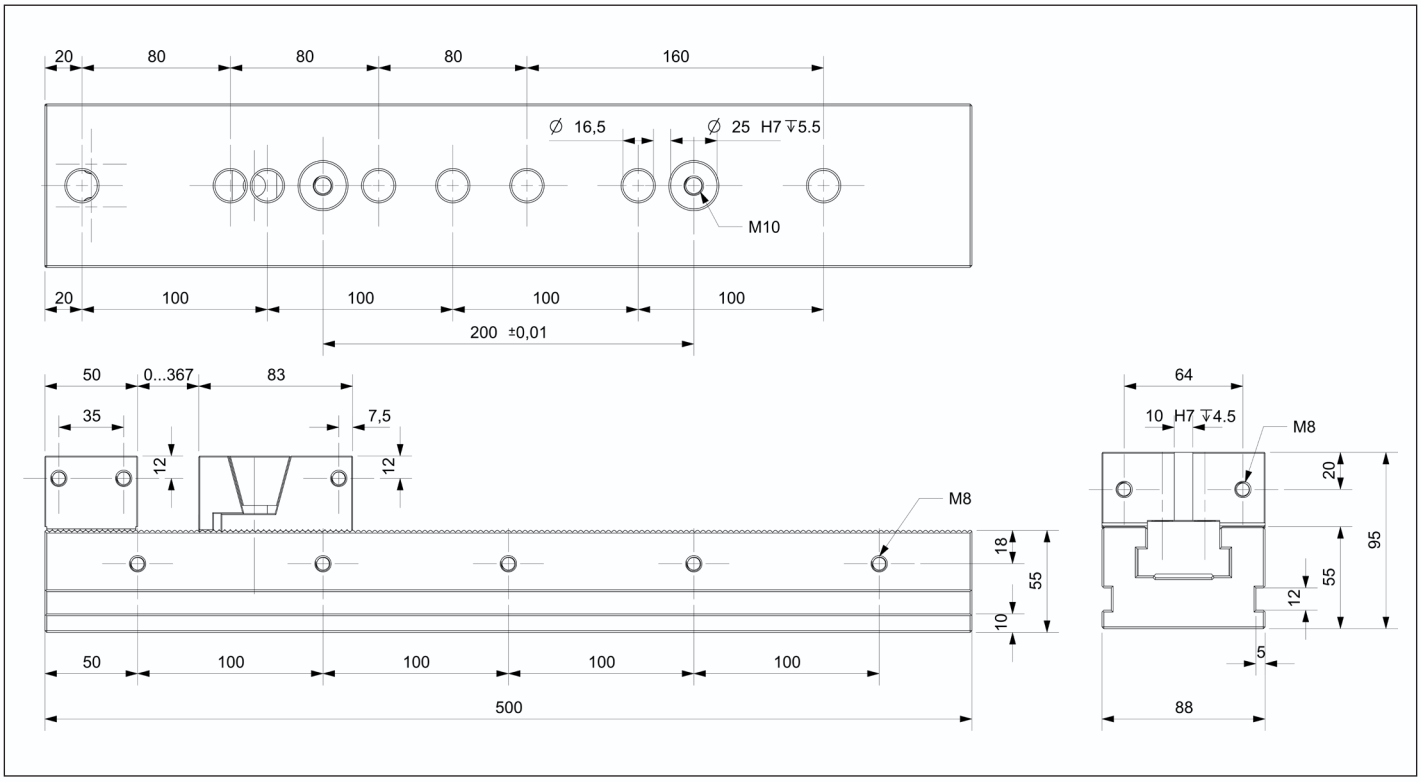

KSD-88-500-**MD TYPE**

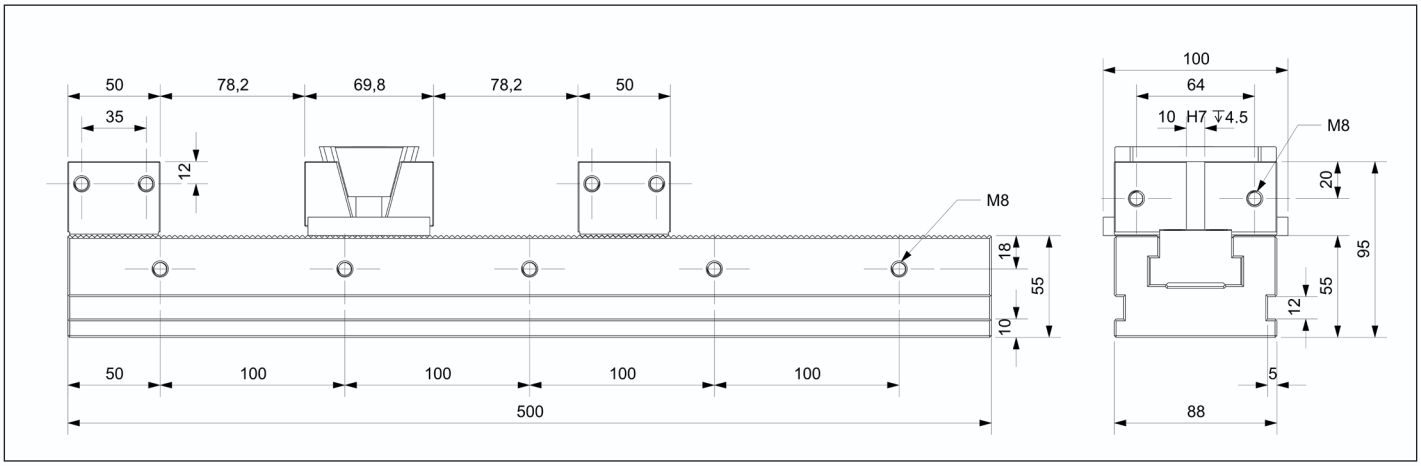

WARWICK®

Clamping Rail

Without system jaws

Scope of delivery
Clamping rail inclusive operating manual; without system jaws

Description	ID	Rail width [mm]	Clamping force [kN]	Max. torque [N.m]	Weight [kg]
KSD88-600	21530	88	35.6	80(FD)	19

KSD-88-600-**FD TYPE**

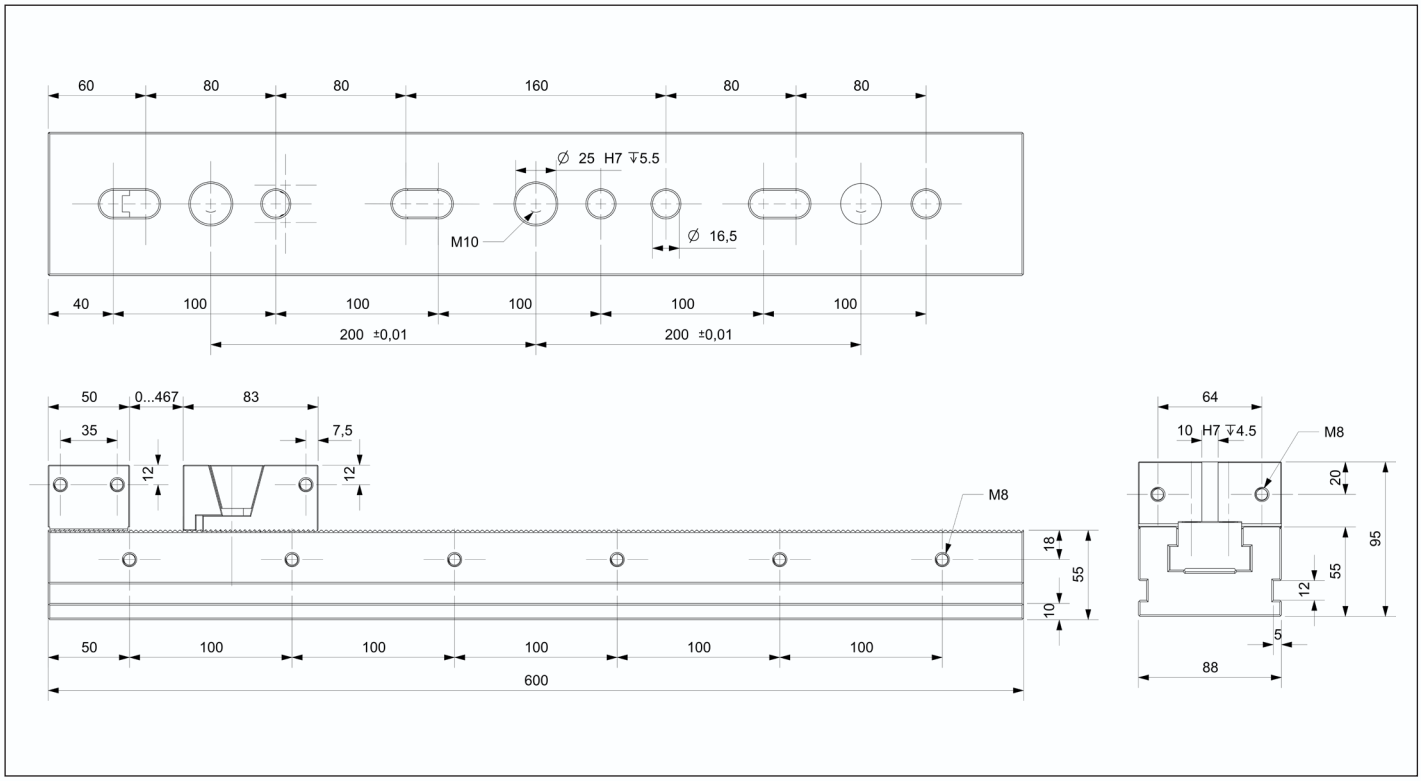

KSD-88-600-**MD TYPE**

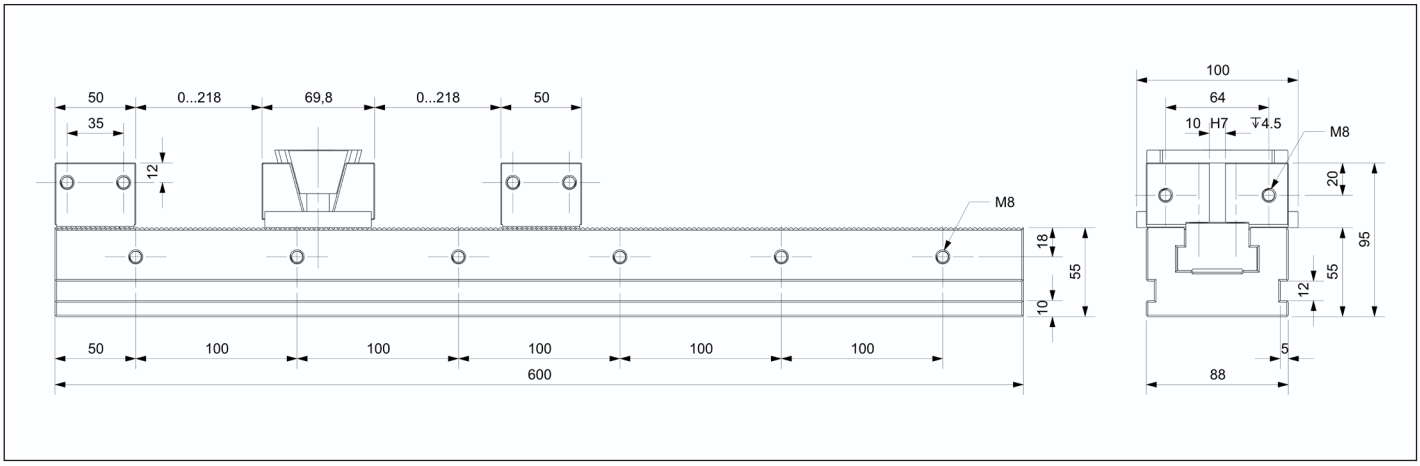

Clamping Rail

Without system jaws

Scope of delivery
Clamping rail inclusive operating manual; without system jaws

Description	ID	Rail width [mm]	Clamping force [kN]	Max. torque [N.m]	Weight [kg]
KSD88-650	21540	88	35.6	80(FD)	21

KSD-88-650-**FD** **TYPE**

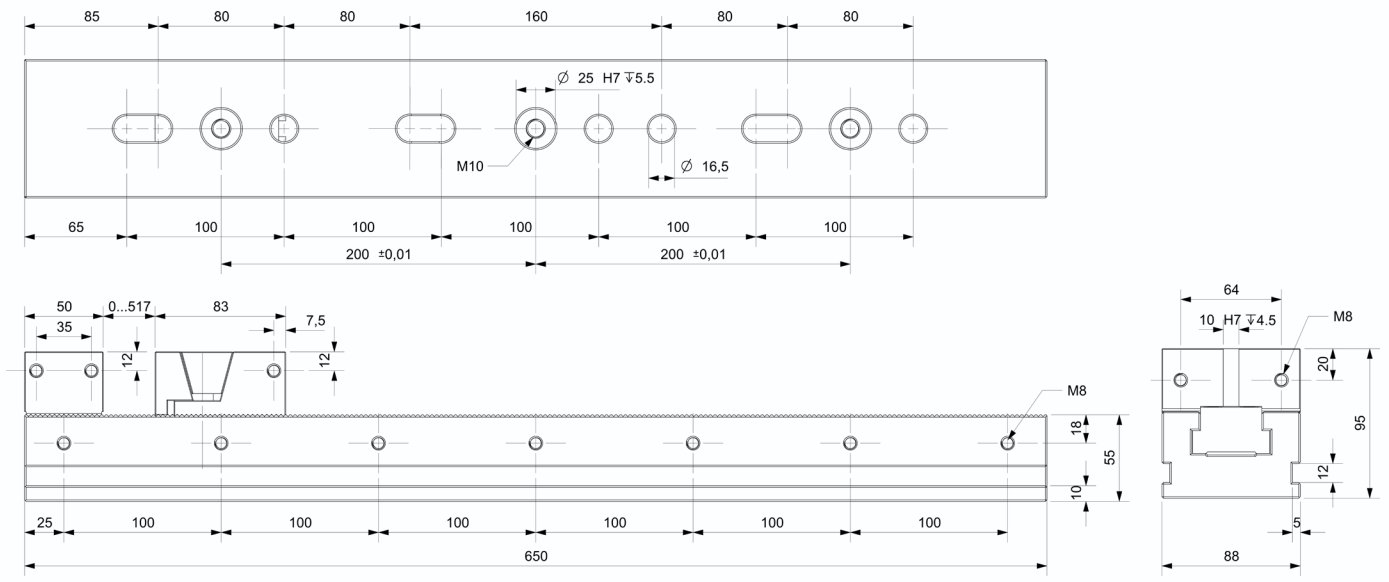

KSD-88-650-**MD** **TYPE**

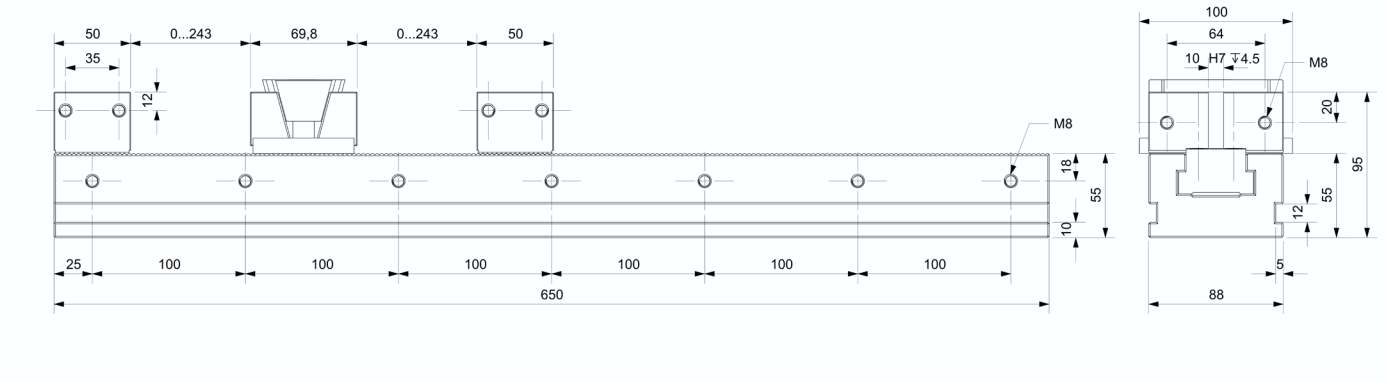

WARWICK®

Clamping Rail

Without system jaws

Scope of delivery
Clamping rail inclusive operating manual; without system jaws

Description	ID	Rail width [mm]	Clamping force [kN]	Max. torque [N.m]	Weight [kg]
KSD88-700	21550	88	35.6	80(FD)	22

KSD-88-700-**FD TYPE**

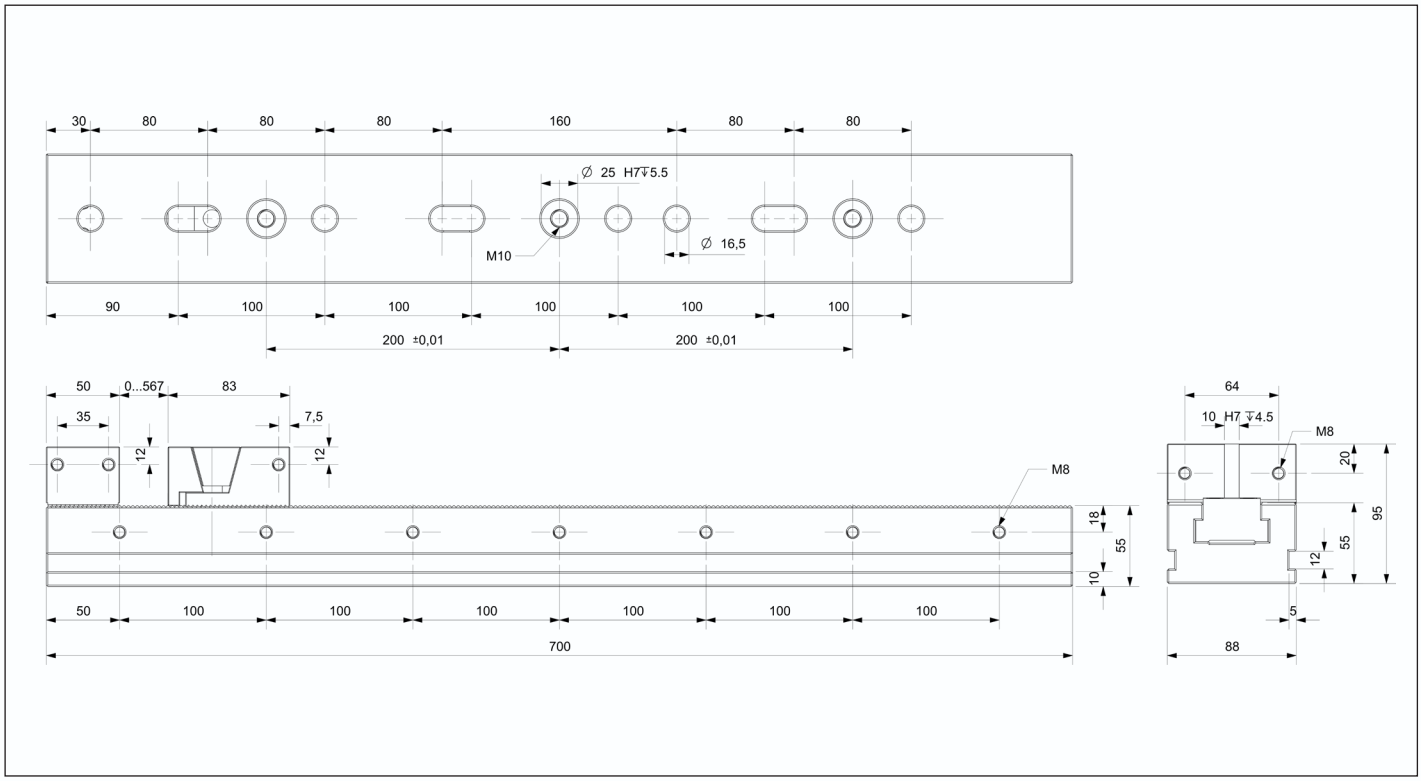

KSD-88-700-**MD TYPE**

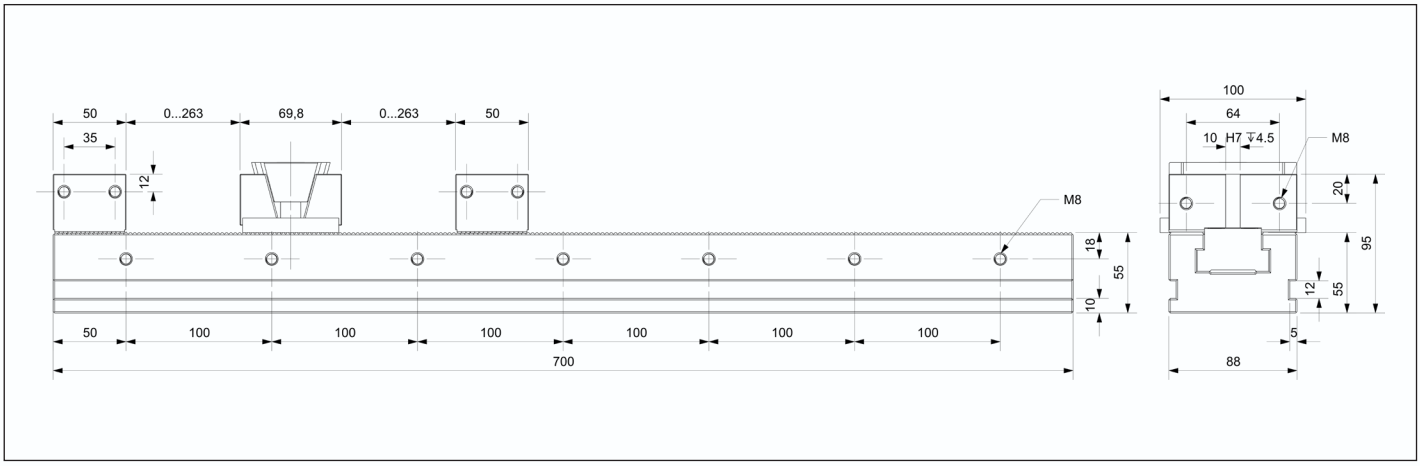

One-way Clamping
Without Clamping Rail

Scope of delivery
One-way Clamping inclusive operating manual; without Clamping Rail

Description	ID	Jaw width [mm]	Clamping force [kN]	Max. torque [N.m]	Weight [kg]
88FD	21600	50	35.6	80	2.5
88FD-T	21601	50	35.6	80	2.5

88FD type unidirectional clamping jaw

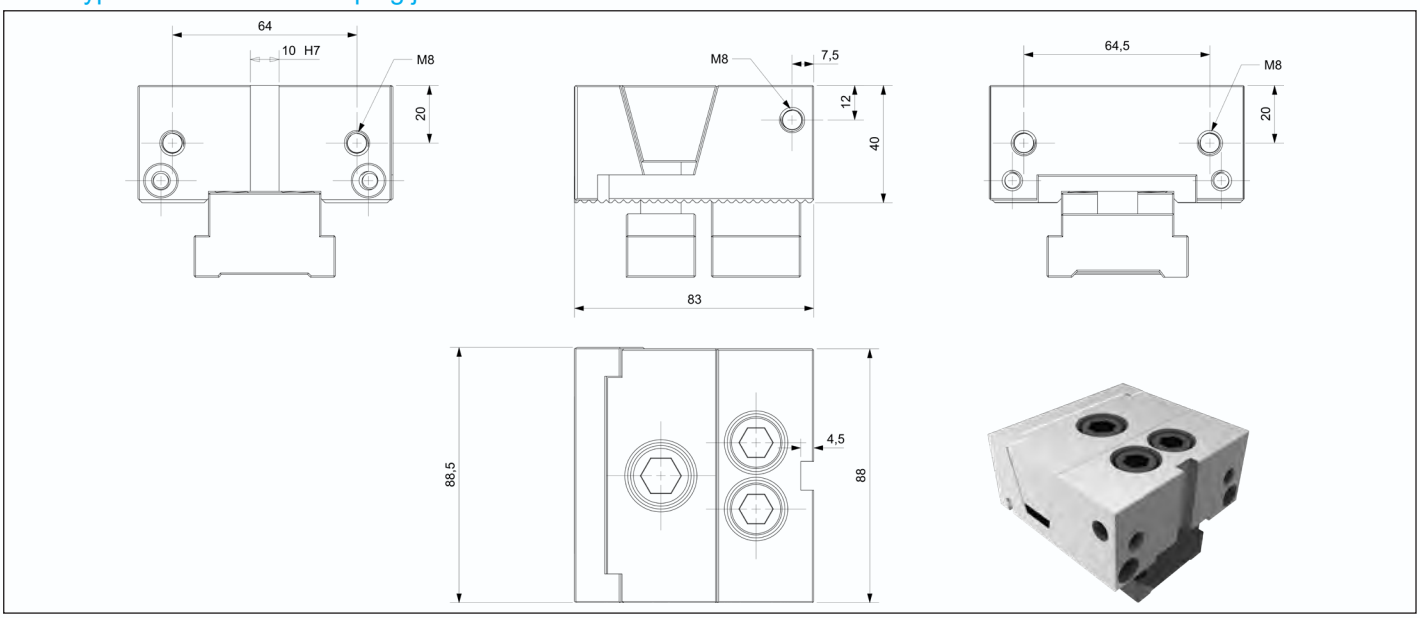

88FD-T Jagged type unidirectional clamping jaw

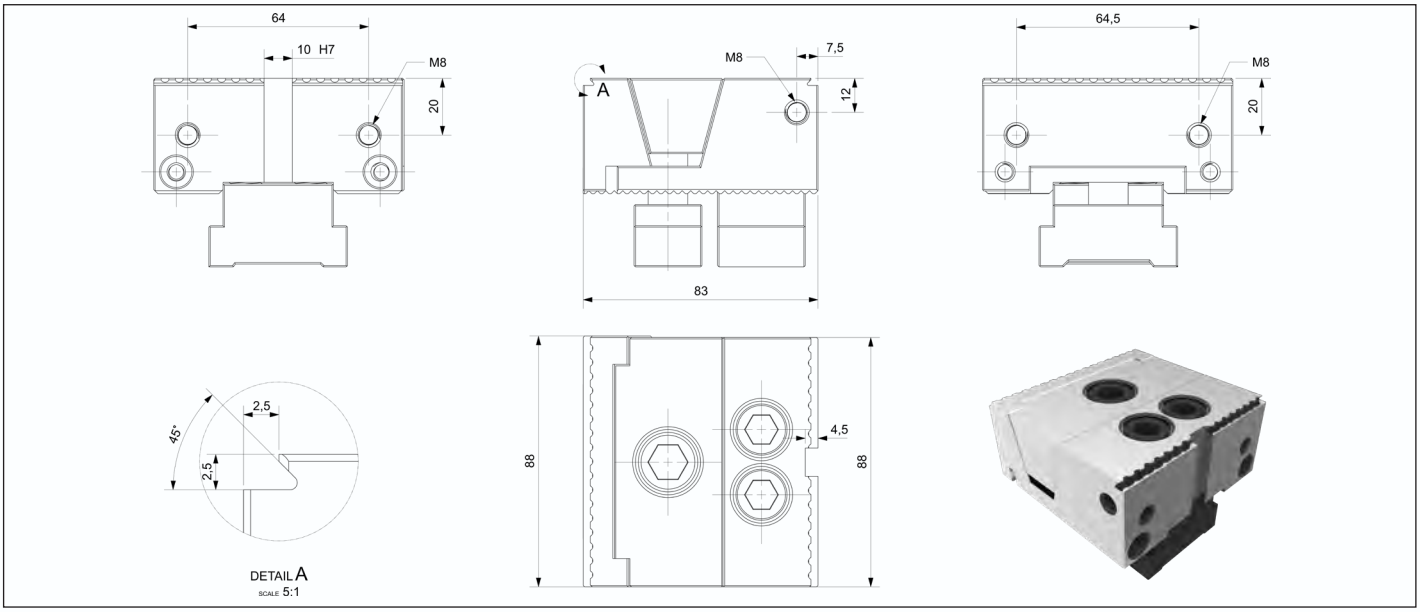

WARWICK®

Two-way Clamping
Without Clamping Rail

Scope of delivery
Two-way Clamping inclusive operating manual; without Clamping Rail

Description	ID	Jaw width [mm]	Clamping force [kN]	Max. torque [N.m]	Weight [kg]
88MD	21602	88	-	80	2.1
88MD-T	21603	88	-	80	2.1

88MD type Bidirectional Clamping Jaw

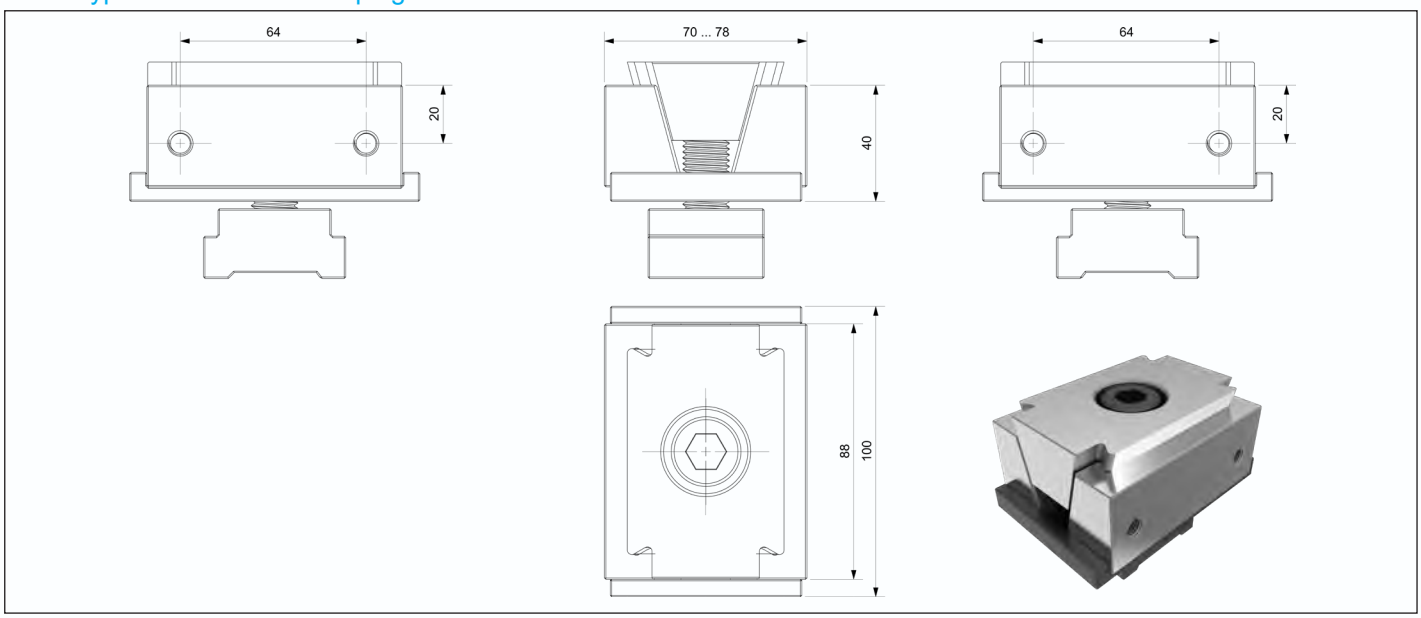

88MD-T Jagged type Bidirectional Clamping Jaw

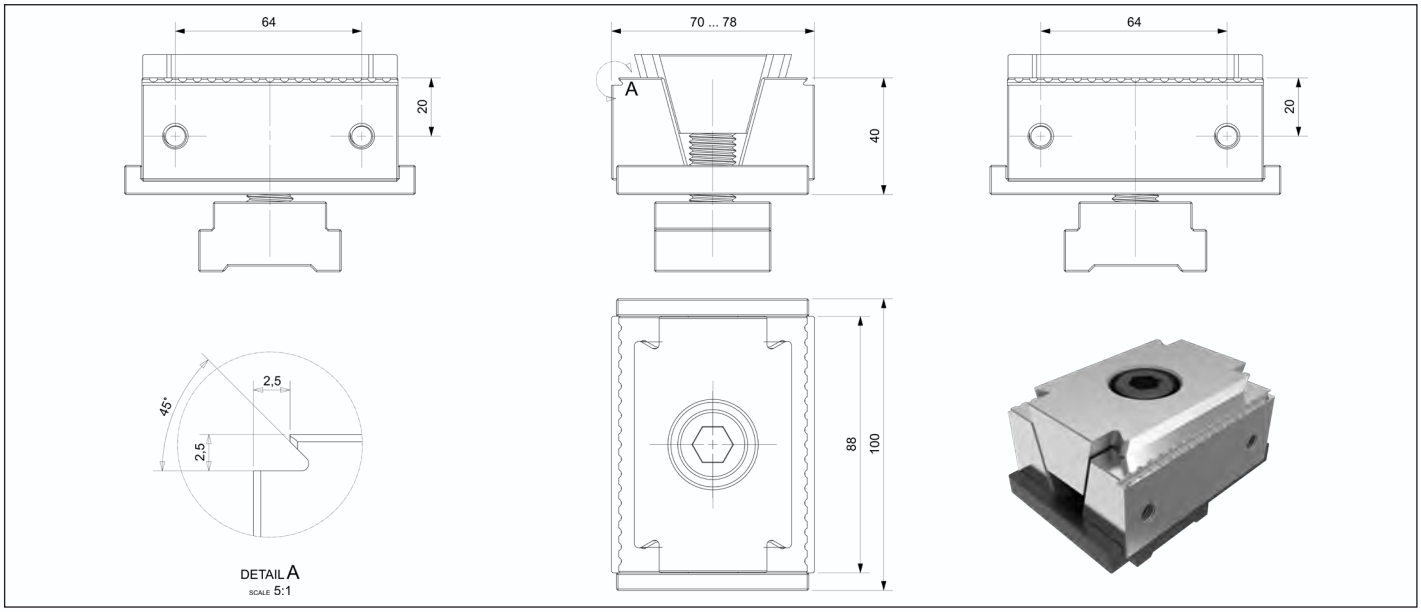

Fixed jaw
Without Clamping Rail

Scope of delivery
Fixed jaw inclusive operating manual; without Clamping Rail

Description	ID	Jaw width [mm]	Clamping force [kN]	Max. torque [N.m]	Weight [kg]
88G	21604	88	-	80	1.5
88G-T	21605	88	-	80	1.5

88G type unidirectional clamping jaw

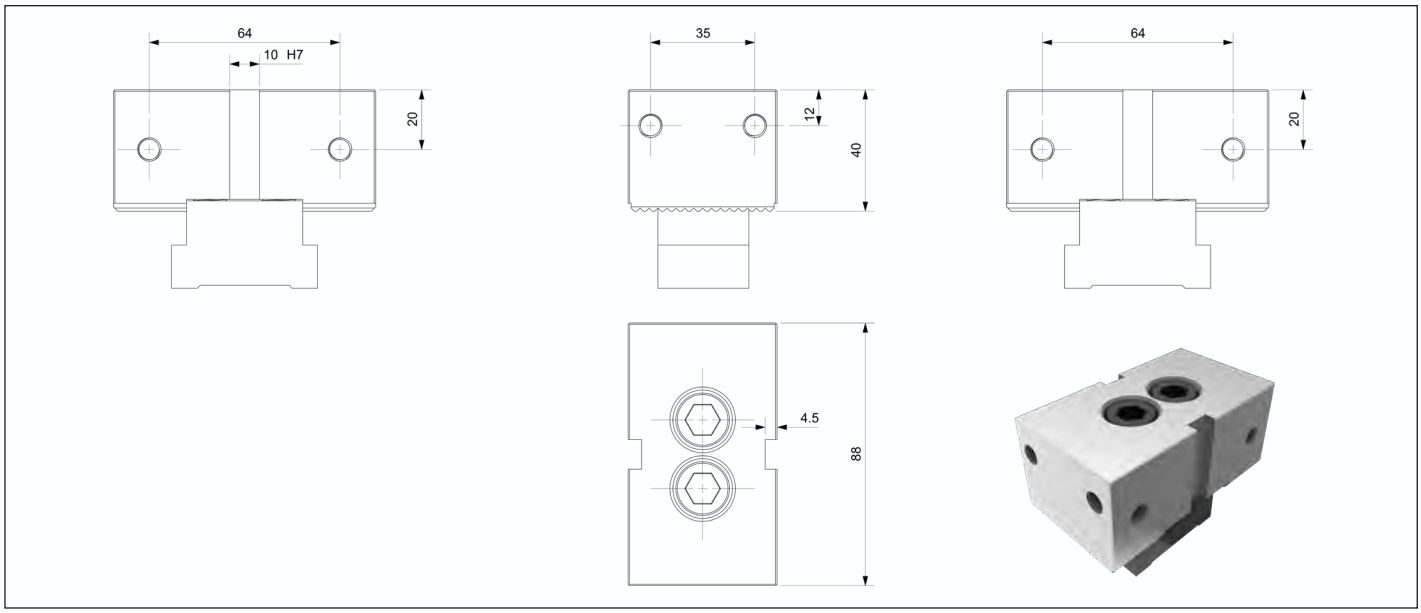

88G-T 锯齿型固定钳口 |88G-T

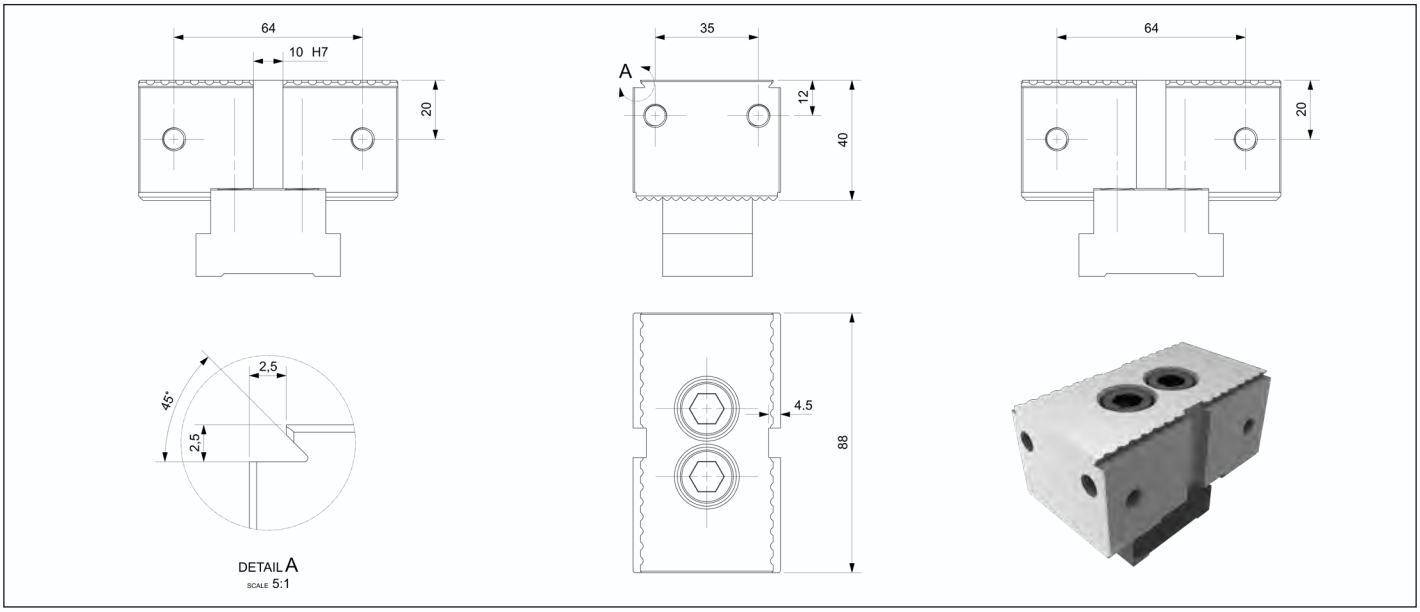

WARWICK®

Soft claw

Customizable production

Material: S45C, hardenable | Aluminum 6061 Version: Fastening bores for screw DIN EN ISO 4762 Mounting: Via tongue and groove

Description	ID	Jaw width A [mm]	Jaw high B [mm]	Weight [kg]
88RZ-B25-A	21610	88	25	0.9
88RZ-B30-A	21611	120	30	1.2

88RZ-A type soft jaw

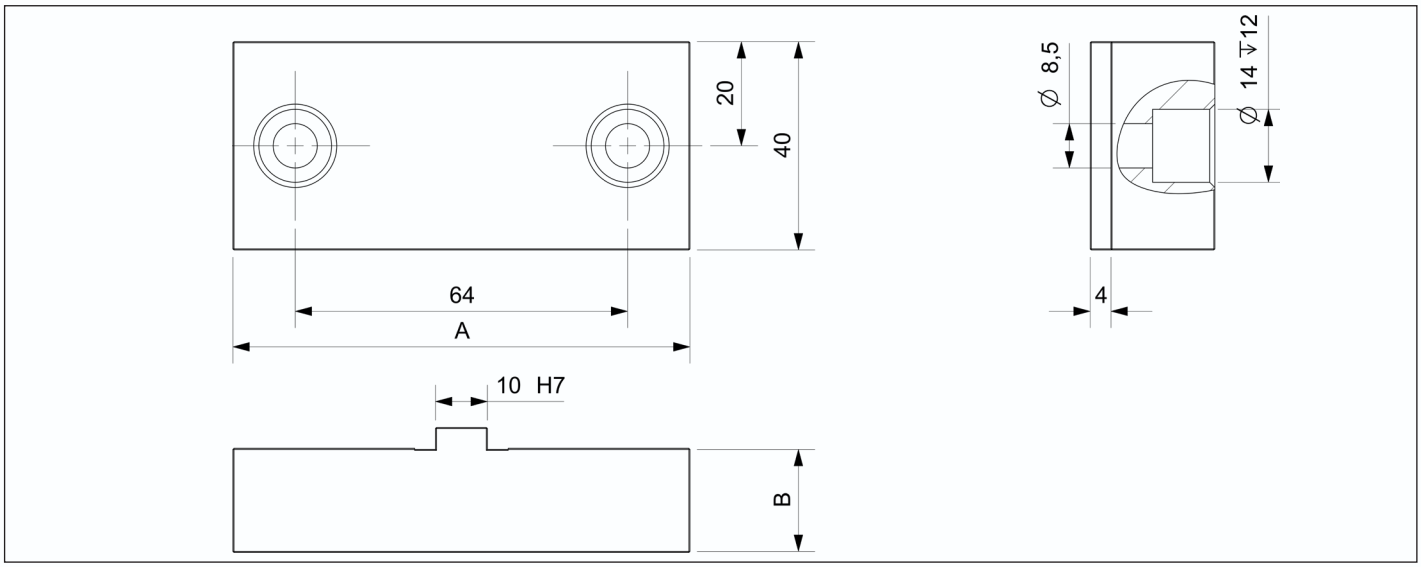

Description	ID	Jaw width A [mm]	Jaw high B [mm]	Weight [kg]
88RZ-B25-C	21615	88	25	1.2
88RZ-B40-C	21616	120	40	1.9

88RZ-C type soft jaw

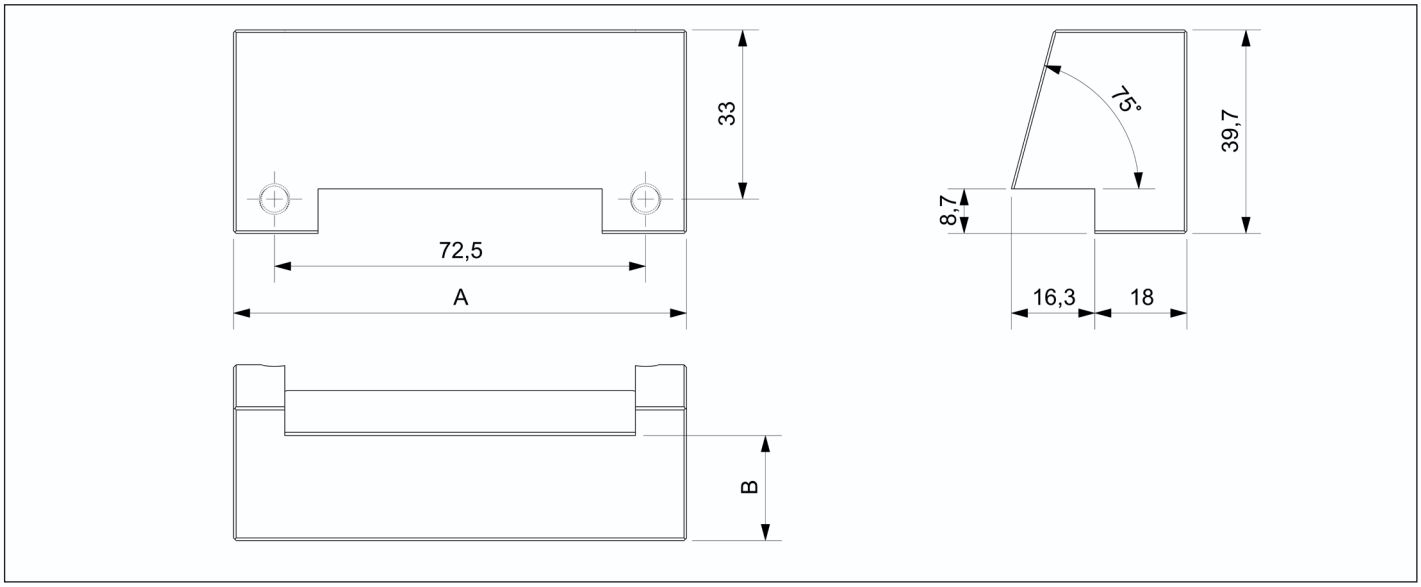

Soft claw

Customizable production

Material: S45C, hardenable | Aluminum 6061 Version: Fastening bores for screw DIN EN ISO 4762 Mounting: Via tongue and groove

Description	ID	Jaw width [mm]	Clamping range [mm]	Weight [kg]
88RZ-V	21620	88	MAX Φ120	0.8

88RZ-V type unidirectional clamping jaw

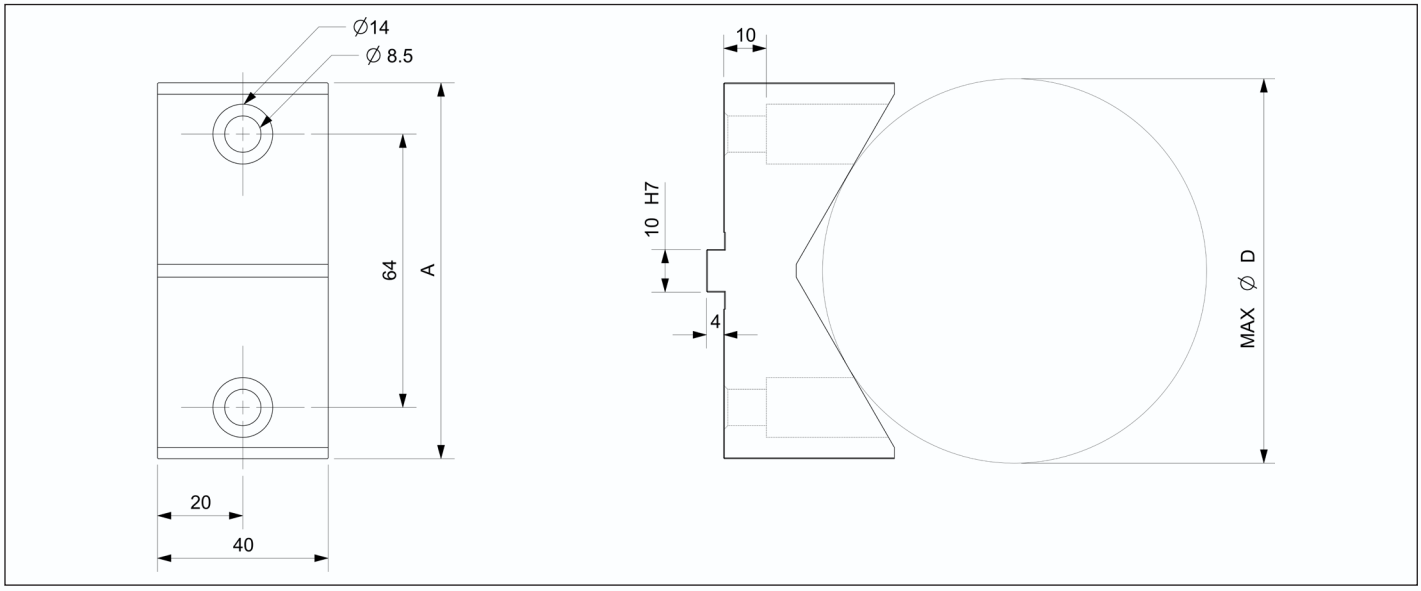

Description	ID	Jaw width A [mm]	Jaw high B [mm]	Weight [kg]
88RZ-B25-B	21625	88	25	0.9
88RZ-B30-B	21626	120	30	1.2

88RZ-B type soft jaw

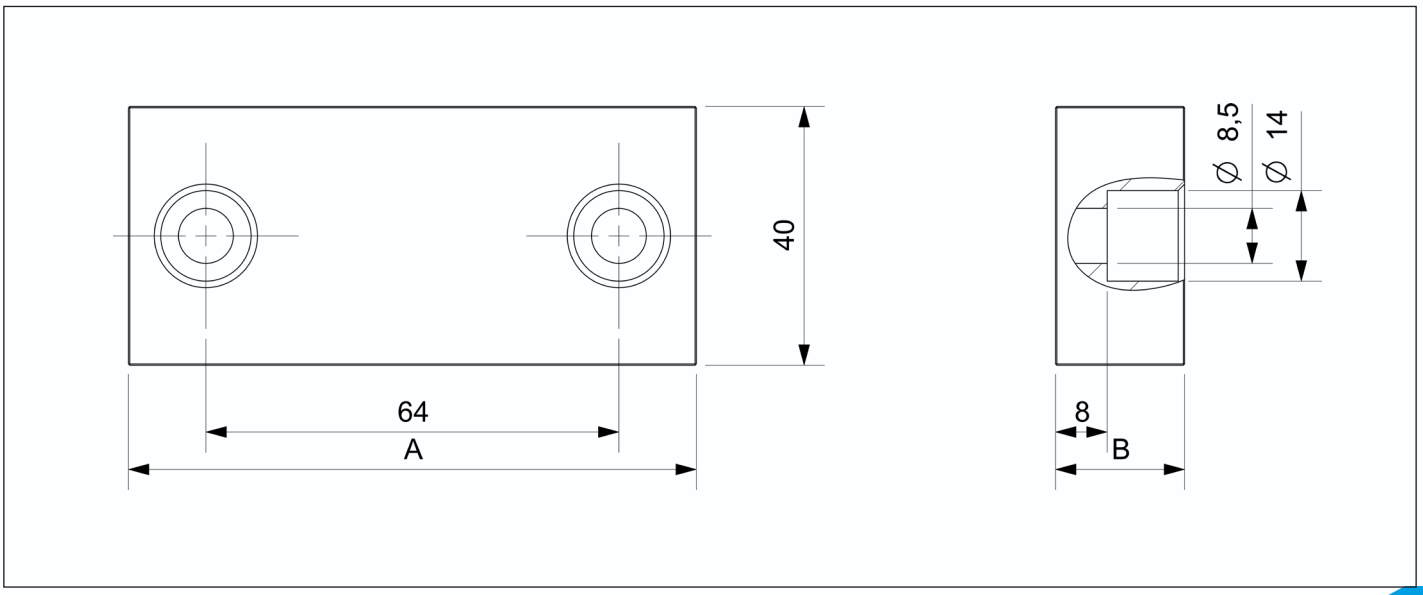

WARWICK®

Parallel gasket

Customizable production

Material: 4140, HRC54-58
Version: Fastening bores for screw DIN EN ISO 4762 Mounting: Installation through mounting holes

Description	ID	Jaw width A [mm]	Jaw high B [mm]	Jaw high C [mm]	Weight [kg]
88DP-530	21630	88	5	30	0.09
88DP-535	21631	88	5	35	0.10
88DP-337	21632	88	3	37	0.15

88DP Parallel gasket

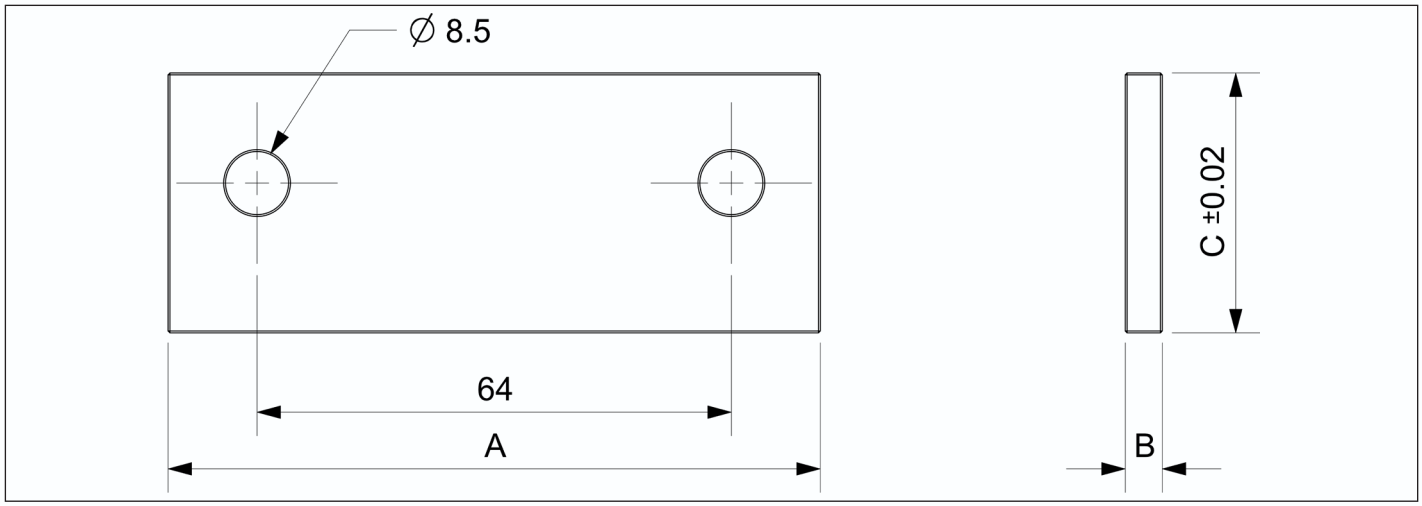

88DW work positioner

Instructions for use
Determine the position of the workpiece

Description	ID	Weight [kg]
88DW	21225	0.2

88DW work positioner

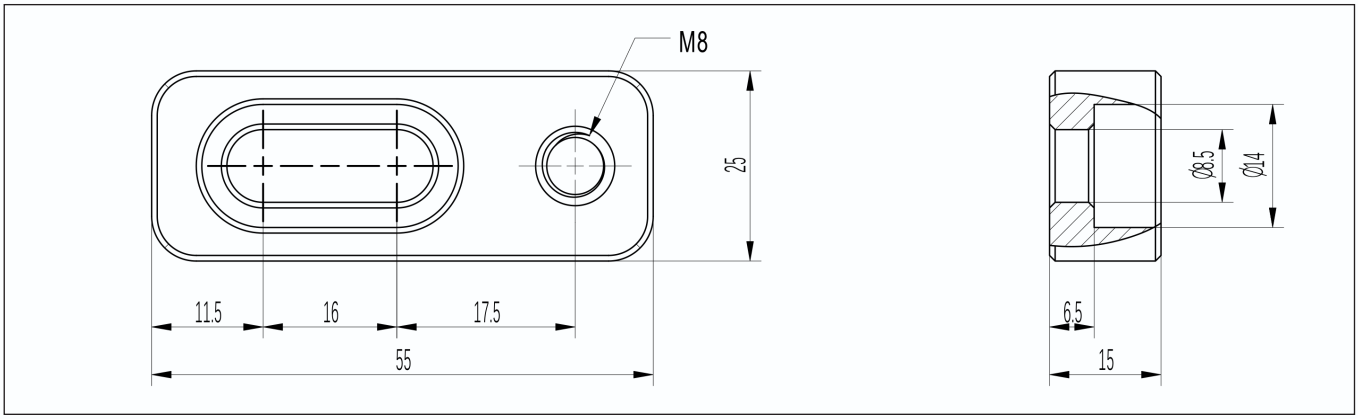

Serrated stationary wedge

Customizable production

Material:
Version: Fastening bores for screw DIN EN ISO 4762 Mounting: Via tongue and groove

Description	ID	Jaw width A [mm]	Jaw high B [mm]	Weight [kg]
88G-MT	21650	88	50	1.8

88G-MT Serrated stationary wedge

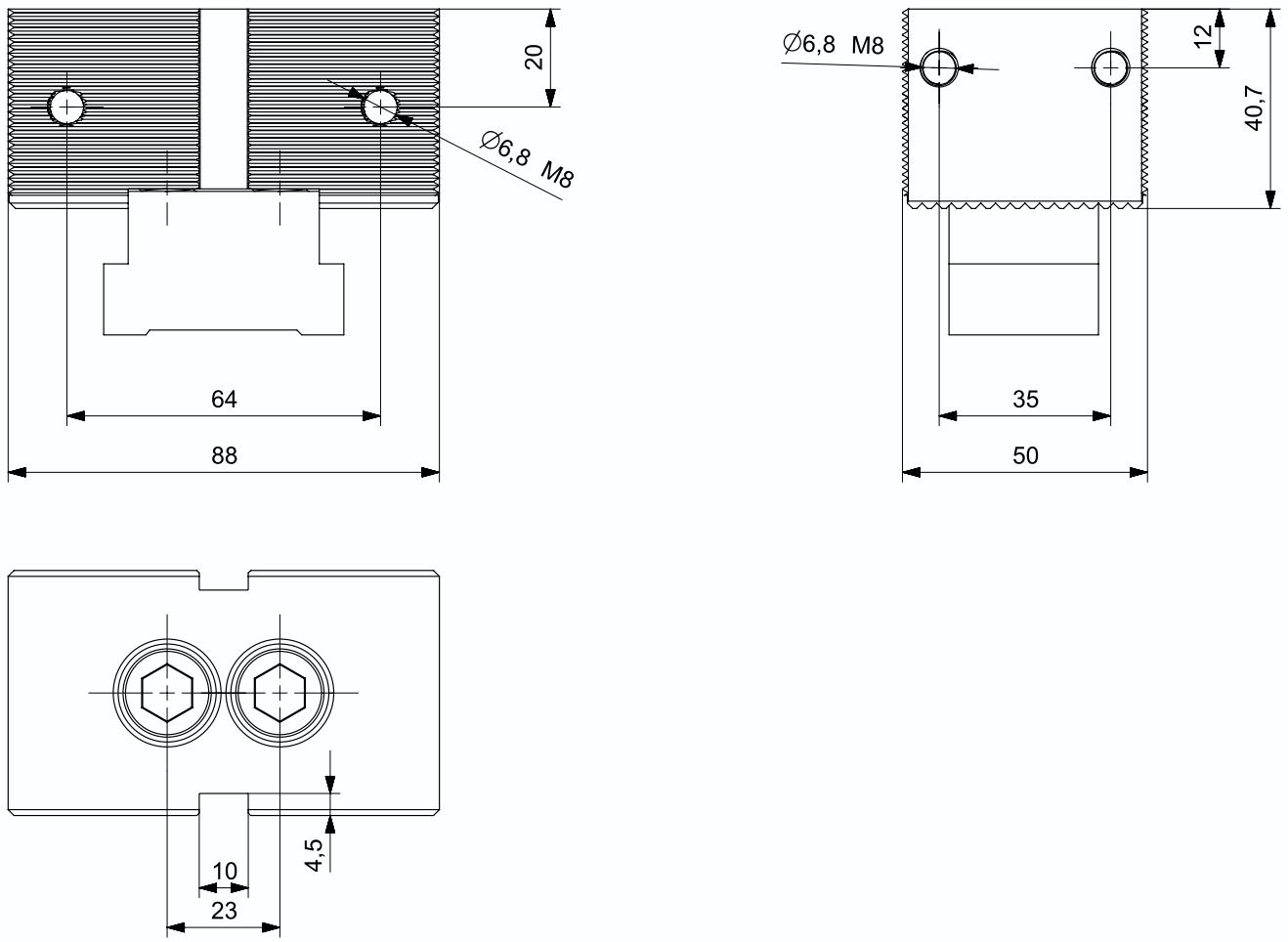

Serrated Jaw

Customizable production

Material: 4140, HRC48-52
Version: Fastening bores for screw DIN EN ISO 4762 Mounting: Installation through mounting holes

Description	ID	Jaw width A [mm]	Jaw high B [mm]	Jaw high C [mm]	Weight [kg]
88C-8815	21660	88	15	40	0.6
88C-8820	21662	88	20	42	0.8
88C-10020	21664	100	20	45	1.0

88C serrated Jaw

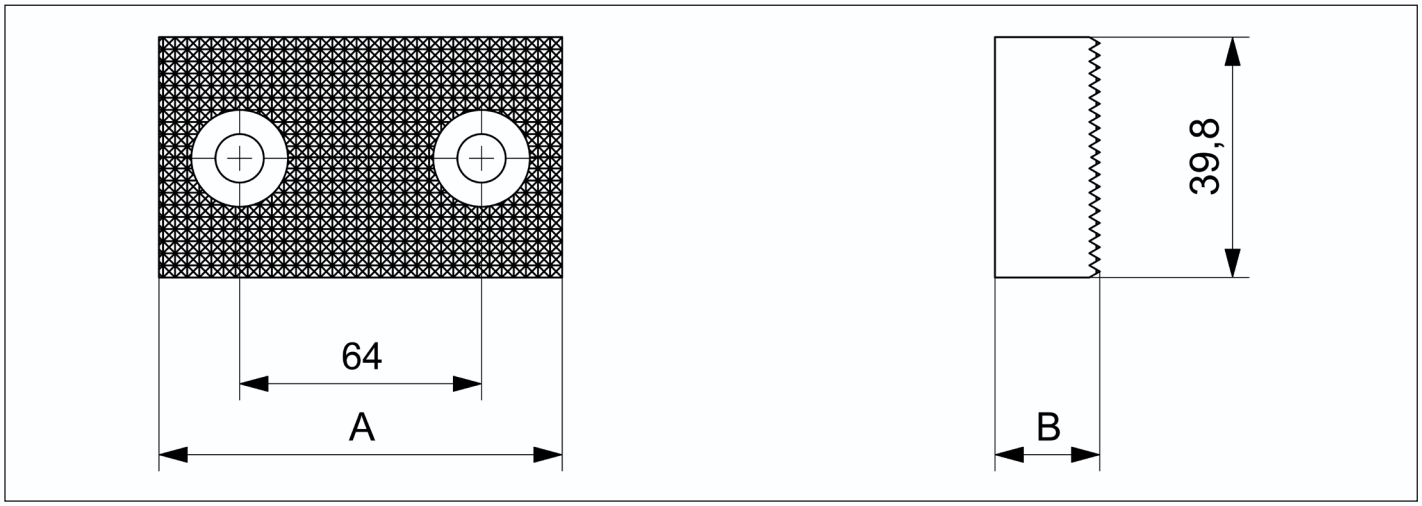

Description	ID	Jaw width A [mm]	Jaw high B [mm]	Jaw high C [mm]	Jaw high D [mm]	Weight [kg]
88C-8815T	21661	88	15	40	5	0.6
88C-8820T	21663	88	20	42	5	0.8
88C-10020T	21665	100	20	45	5	1.0

88C-T serrated step Jaw

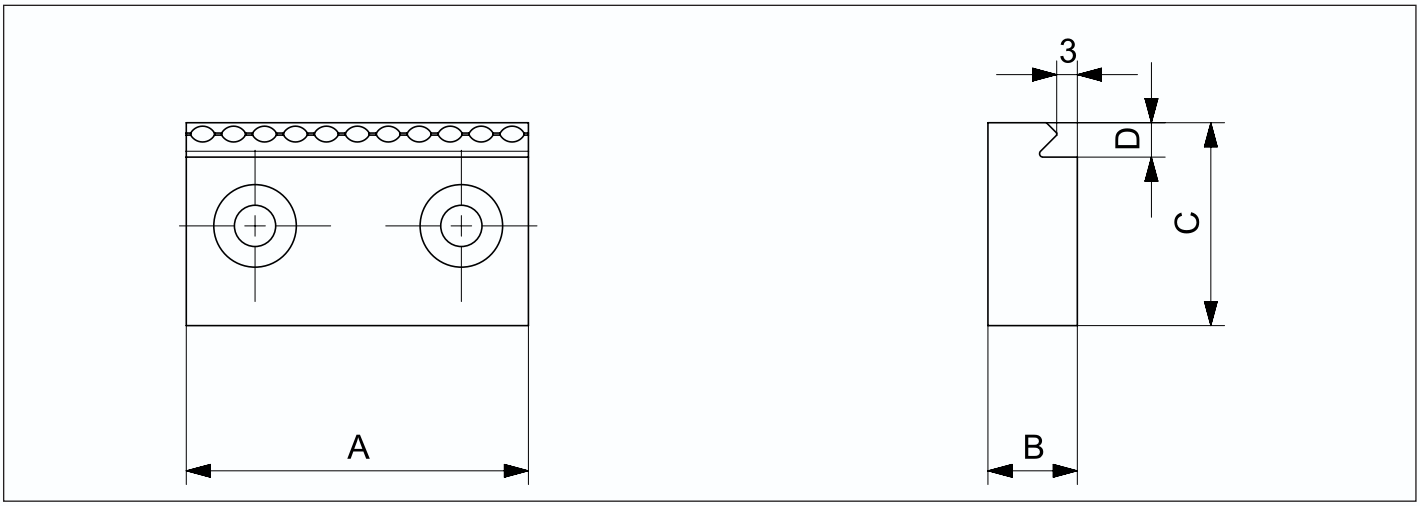

WARWICK®

KSE

Wedge Clamping Element KSE
maximize the use of your machine table!

Applied to the SIMPLE-KSZ system, the aesthetics of the matrix will be revealed.

Huge number of setups with minimal downtime and tool changes.

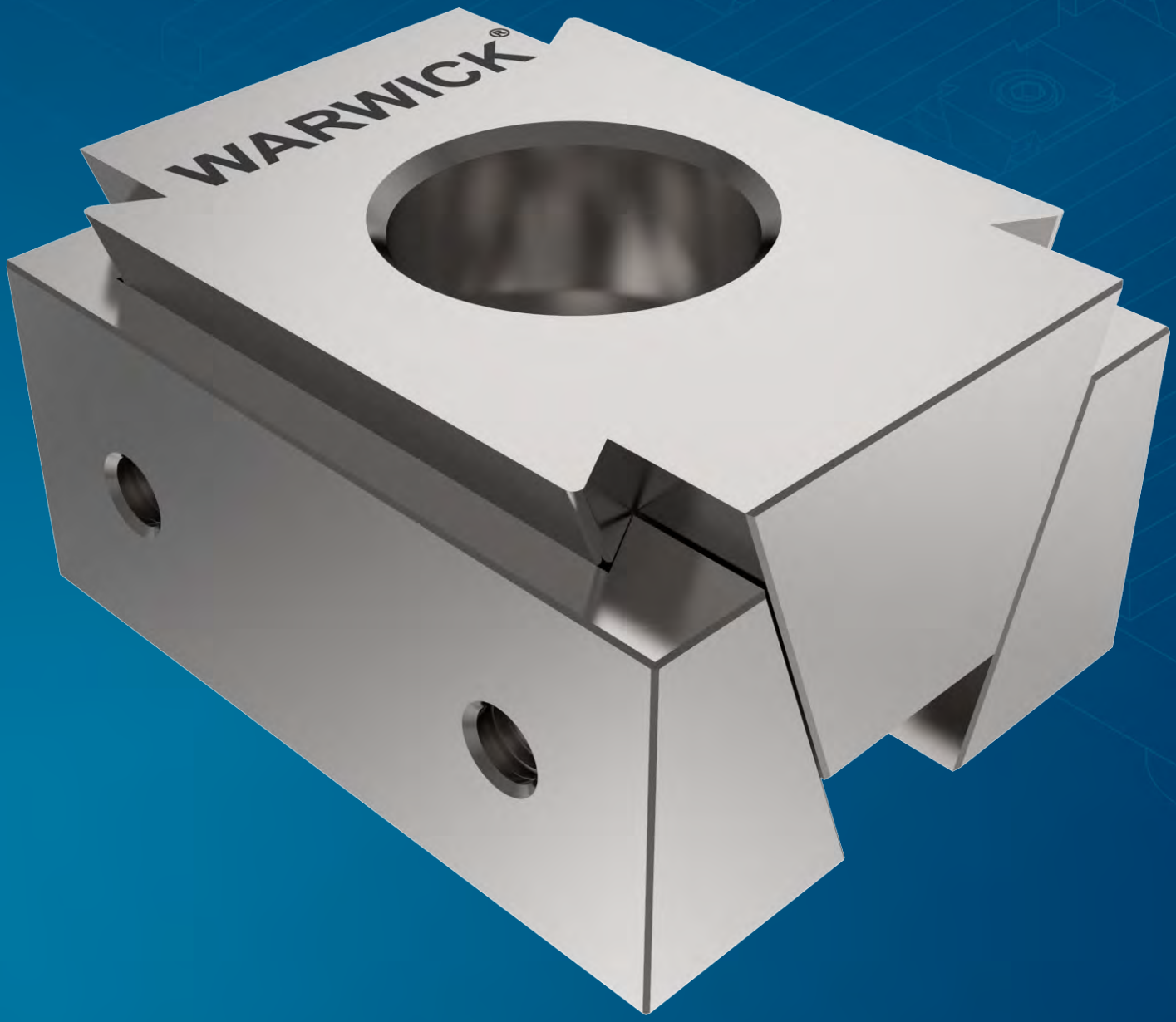

Advantages – Y

Easy handling

Interior recoil spring

High clamping forces of 15 or 30 kN

Clamping over hardened wedge surfaces by means of locking screw

Flexible when using WARWICK SIMPLE-TCP clamping pallets

Optimal for multiple clamping

Incorporated oblong hole for compensating workpiece tolerances

The clamping force is the arithmetic sum of the various forces on the chuck jaws under the maximum pressure and maximum torque.

Technology

Workpieces are clamped with a hexagon socket screw key. The middle clamping wedge is moved down by turning the clamping screw to the right. The two clamping jaws slide through the wedge outwards and clamp the workpiece. When the clamping screw is loosened, the middle clamping wedge is returned to its original position via an interior recoil spring.

1 Clamping jaw
2 Clamping screw
3 Clamping wedge
4 Recoil spring

Wedge Clamping Element KSE

With smooth clamping surface, or with thread for the upper jaw and compensation plate

Description	ID	Lmin [mm]	Lmax [mm]	H1 [mm]	H2 [mm]	b [mm]	h [mm]	Jaw width (B)	Clamping force (per jaw)	Clamping screw	Jaw
KSE25-6	23101	29	33.4	12	16	12	6	25	11.2 KN /at 18 Nm	M6	Thread（M4）
KSE32-8S	23103	34	38	15	19			32	15.8 KN /at 30 Nm	M8	光面 . smooth
KSE32-8	23105	40	44.5	15	19	16	7.5	32	15.8 KN /at 30 Nm	M8	Thread（M5）
KSE32-8P	23107	40	44.5	15	19			32	15.8 KN /at 30 Nm	M8	光面 . smooth
KSE50-12	23109	39	44.5	22	27	30	11	50	28.6 KN /at 76 Nm	M12	Thread（M5）
KSE50-12P	23111	39	44.5	22	27			50	28.6 KN /at 76 Nm	M12	光面 . smooth

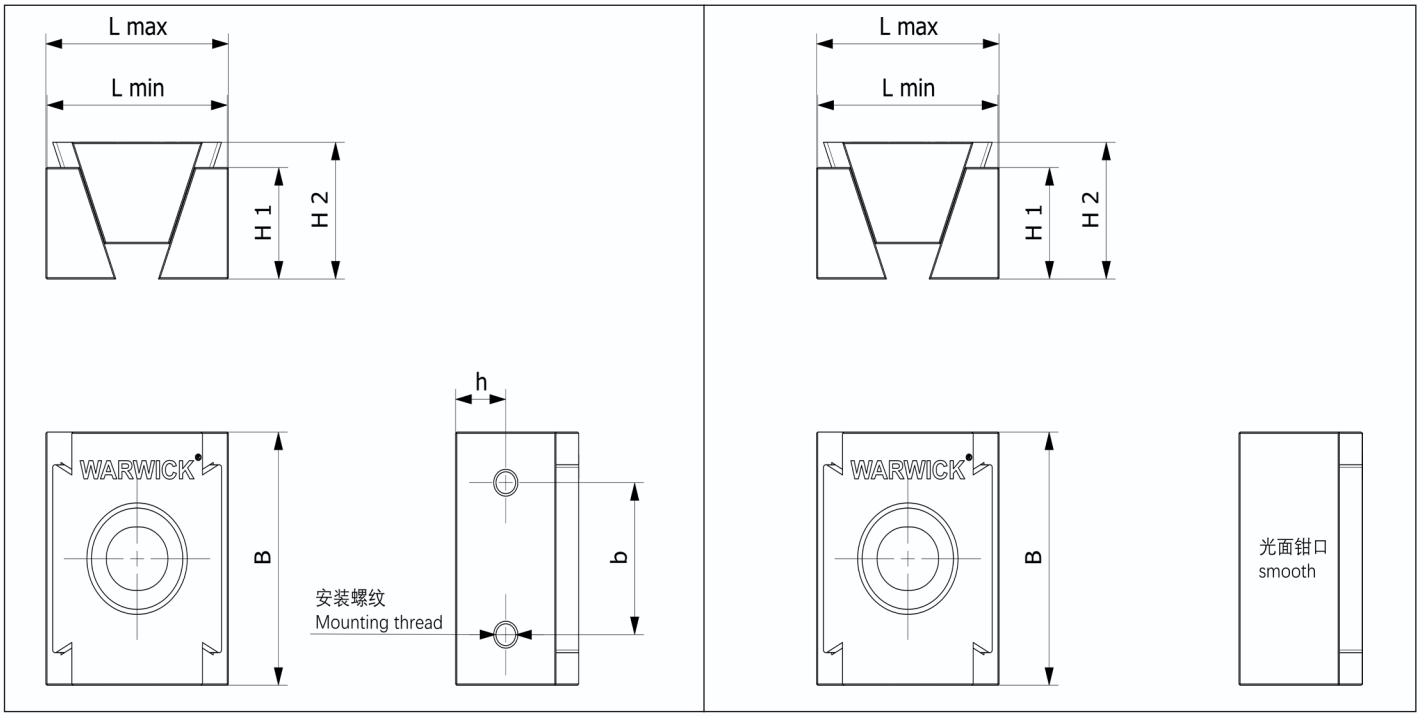

KSH

Centering Clamping Mandrels
maximize the use of your machine table!

The centering clamping mandrels are often used in mechanical engineering. However, thanks totheir simple operation and quick assembly, they can be used in all industries.
Centering clamping mandrels are used for centering and clamping of workpieces with a locating hole.
The centering clamping mandrels have the following characteristics:

- Very high accuracy for turning/milling processes
- Ideal for secondary operations on turned parts
- Clamping body can be machined very easily (for adaptation to bore diameter)

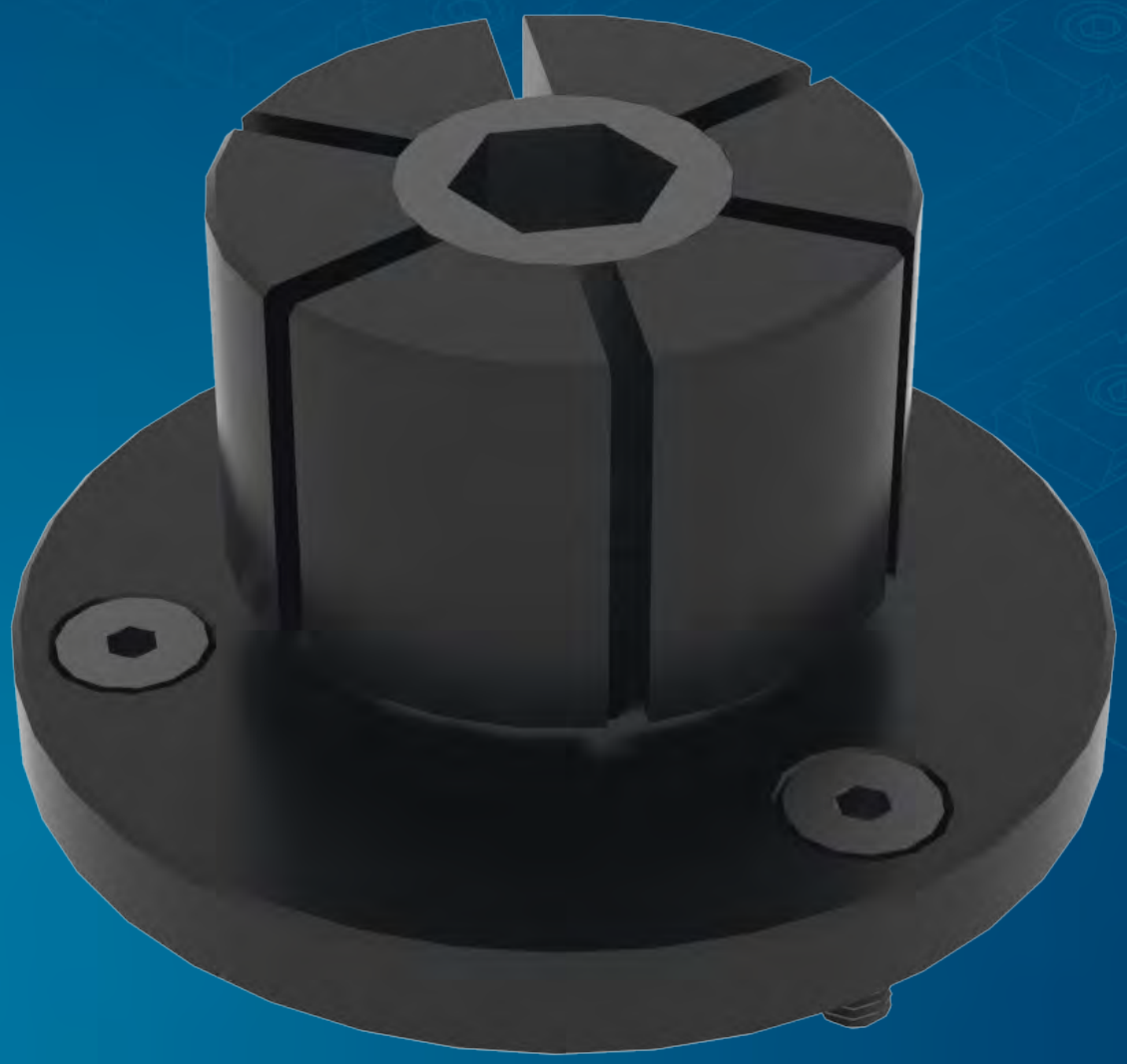

Centering Clamping Mandrels

The centering clamping mandrel can be machined to the required seating diameter (e.g. by turning/milling). It must be noticed that before machining the centering clamping mandrel, it will be expanded approx. 0.1 mm over the clamping diameter. To machine the mandrel, a nut will be provided.Further or detailed information can be found in the assembly and operating instructions.
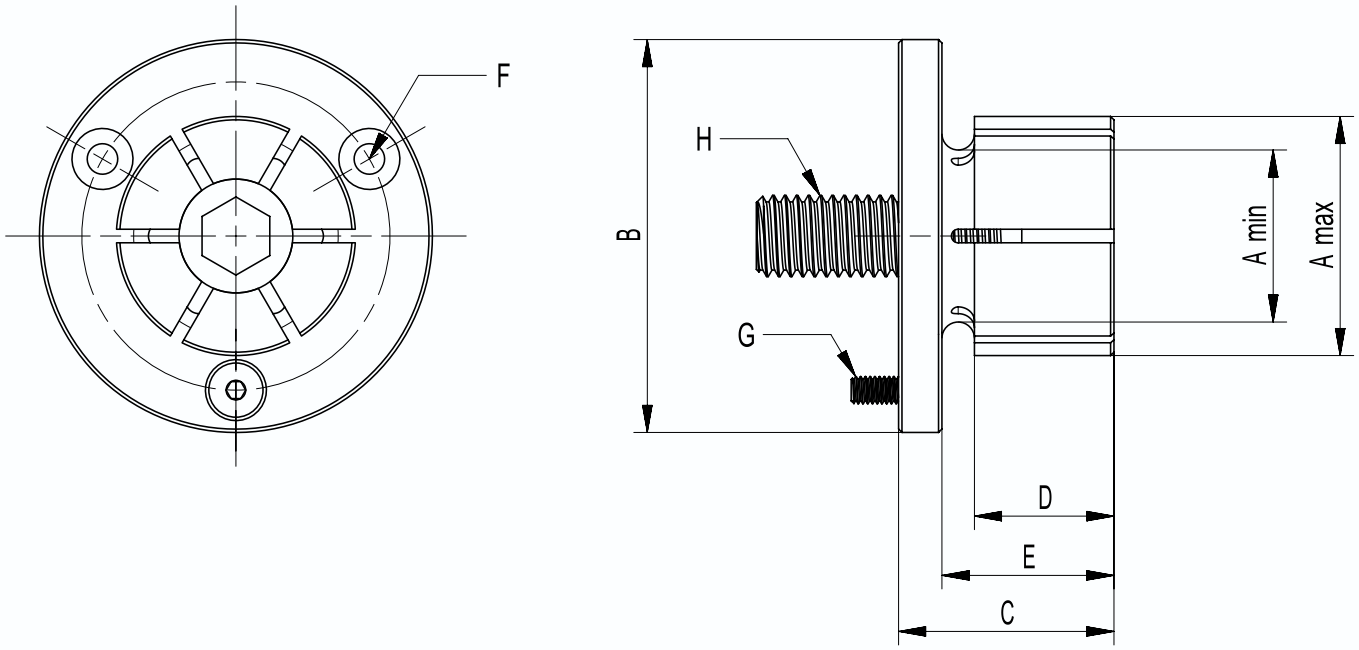
Description	ID	Amin [mm]	Amax [mm]	B [mm]	C [mm]	D [mm]	E [mm]	F [mm]	G [mm]	H [mm]	Clamping force	weight [kg]
KSH12-M4	23201	8.0	12.4	30	21.8	15	16	21	M3	M4	3 KN /at 3.5 Nm	0.1
KSH14-M6	23203	12.2	14.2	30	24.9	15	19	23.1	M3	M6	6 KN /at 12 Nm	0.1
KSH20-M8	23205	13.5	20.0	38	24.9	15	19	29	M3	M8	8 KN /at 24 Nm	0.13
KSH27-M10	23207	18.0	27.0	50	28.6	17.5	22.2	39.4	M4	M10	13 KN /at 42 Nm	0.25
KSH35-M12	23209	25.4	35.3	58	31.8	20.6	25.4	45.5	M4	M12	15 KN /at 105 Nm	0.35
KSH51-M16	23211	30.0	51.0	78	39.6	27.0	31.8	63.9	M5	M16	26 KN /at 200 Nm	0.85
KSH77-M16	23213	30.0	77.0	108	45.5	32.3	37.6	92.5	M6	M16	26 KN /at 200 Nm	2.3